**SEPTEMBER 6, 2000 ( P= 22.33, Bo = 7.25, Lo = 320.09)**

KITT PEAK MAGNETOGRAM

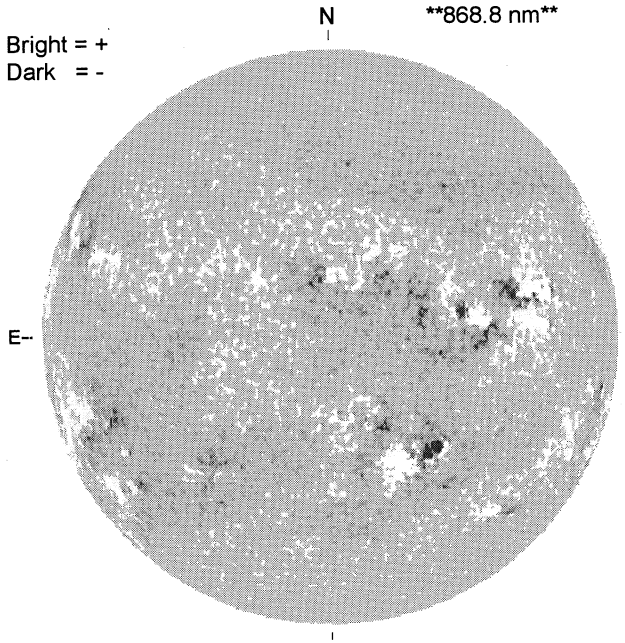


STANFORD MAGNETOGRAM

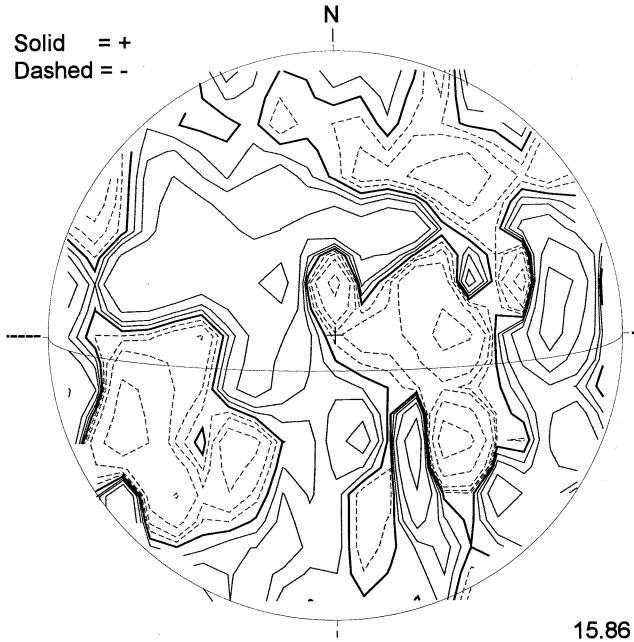


MT. WILSON MAGNETOGRAM

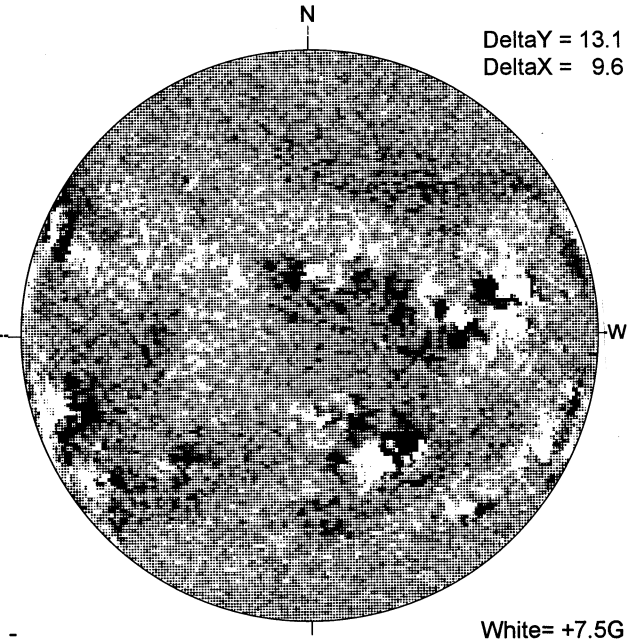


MEUDON H-ALPHA

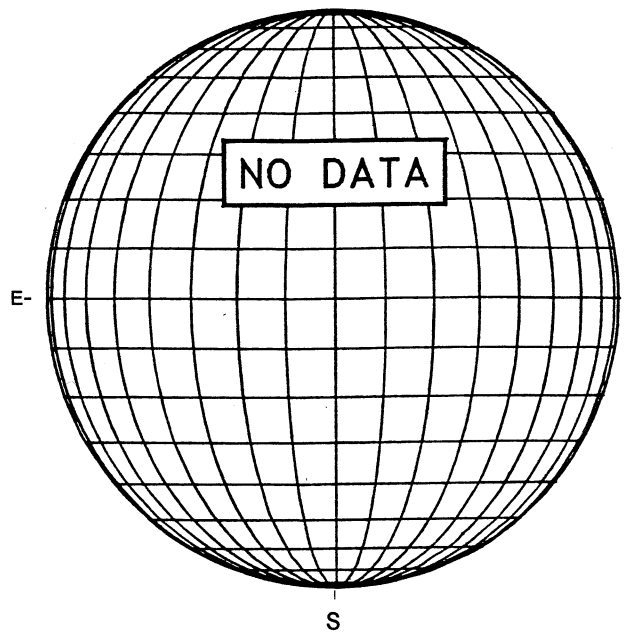


RAMEY SUNSPOT

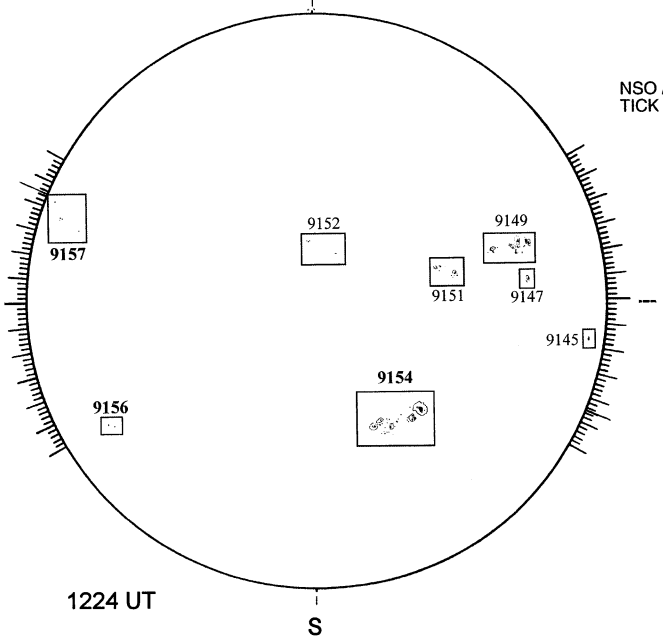

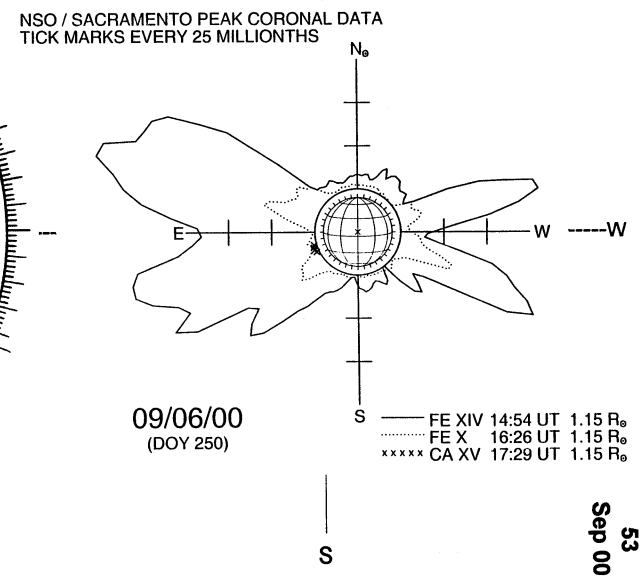
SACRAMENTO PEAK CORONA (1.15 Radii)----