SEPTEMBER 1, 2000 (P= 21.14, Bo = 7.20, Lo = 26.13)

KITT PEAK MAGNETOGRAM

868.8 nm

Bright = +
Dark = -

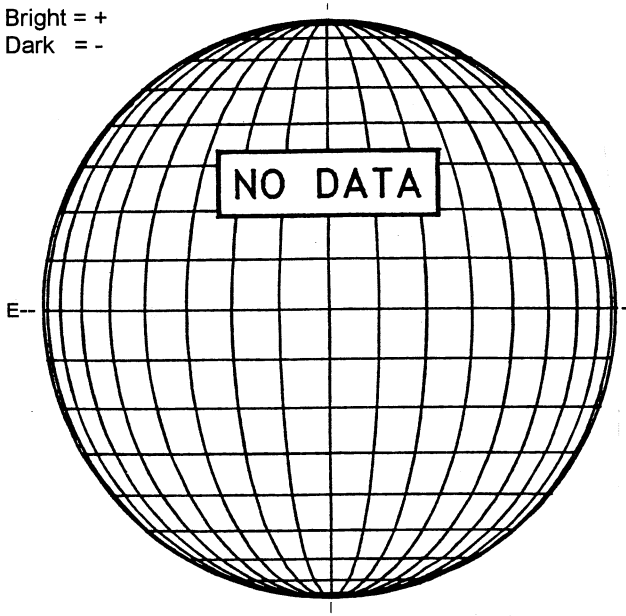

STANFORD MAGNETOGRAM

Solid = +
Dashed = -

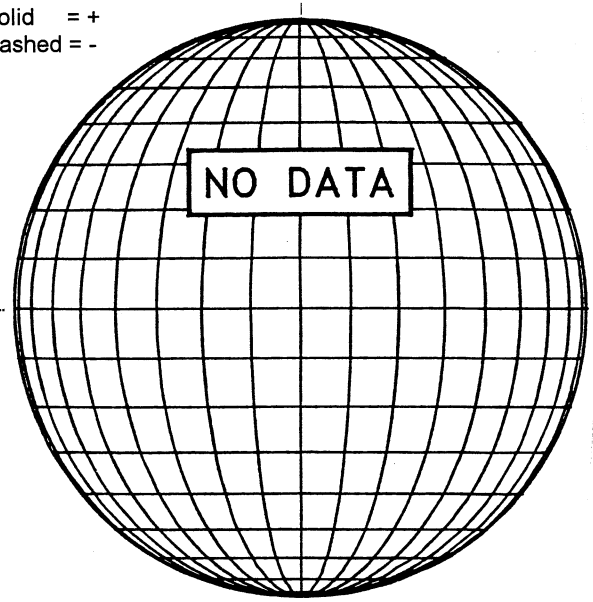

MT. WILSON MAGNETOGRAM

DeltaY =
DeltaX =

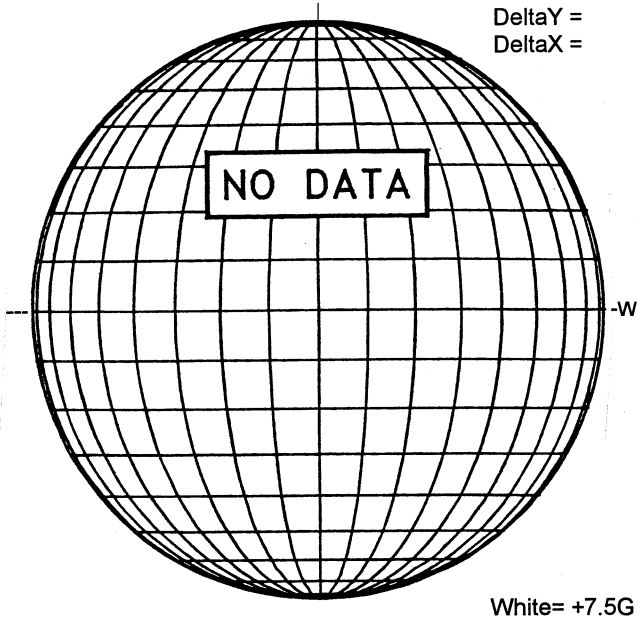

White= +7.5G
Black = -7.5G

MEUDON H-ALPHA

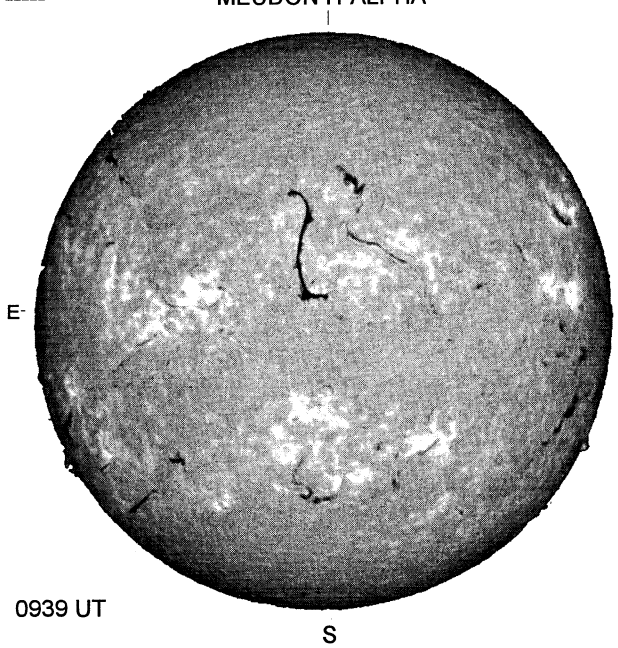

0939 UT

RAMEY SUNSPOT

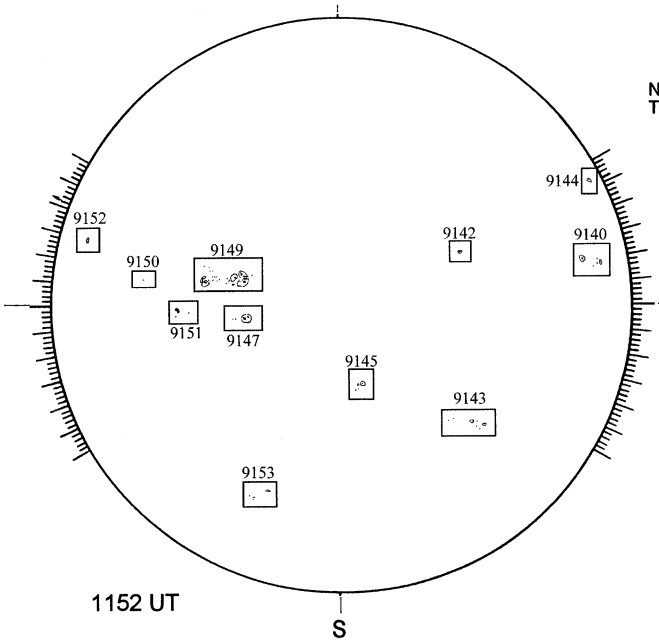

1152 UT

SACRAMENTO PEAK CORONA (1.15 Radii)

NSO / SACRAMENTO PEAK CORONAL DATA
TICK MARKS EVERY 25 MILLIONTHS

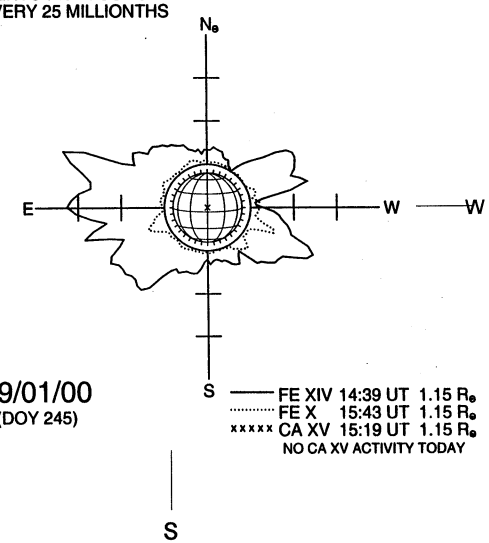

09/01/00
(DOY 245)

FE XIV 14:39 UT 1.15 $R_\odot$
FE X 15:43 UT 1.15 $R_\odot$
xxxxx CA XV 15:19 UT 1.15 $R_\odot$
NO CA XV ACTIVITY TODAY