AUGUST 31, 2000 (P= 20.89, Bo = 7.18, Lo = 39.34)

KITT PEAK MAGNETOGRAM

N

868.8 nm

Bright = +
Dark = -

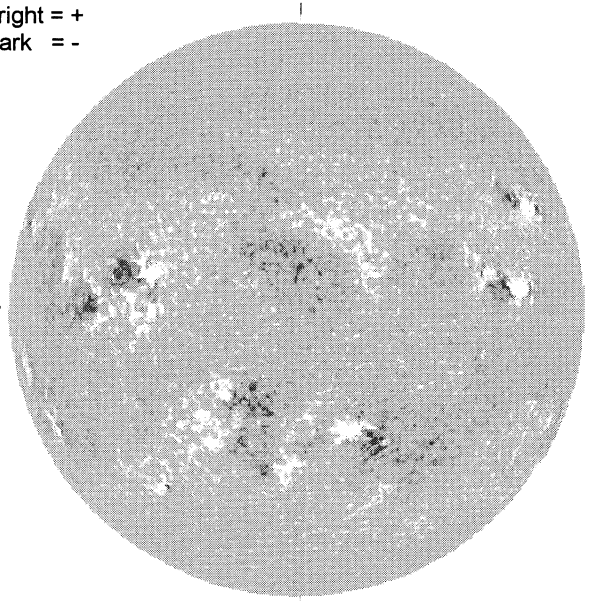

E-

1450 UT

STANFORD MAGNETOGRAM

N

Solid = +
Dashed = -

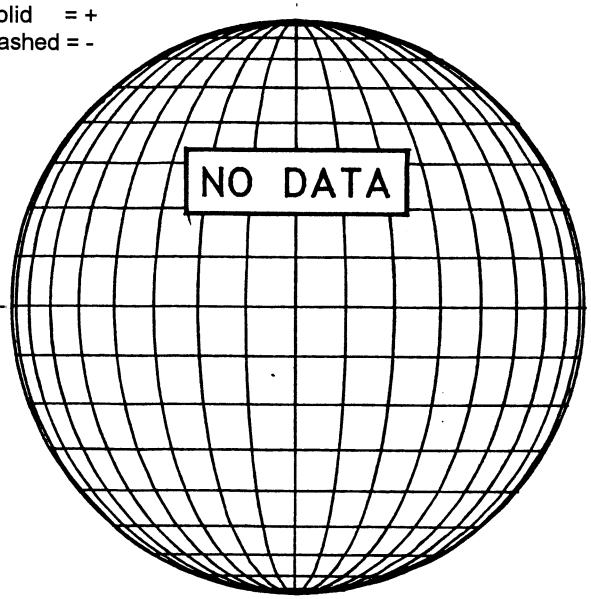

23.94 -
24.87 UT

MT. WILSON MAGNETOGRAM

N

DeltaY = 13.1
DeltaX = 9.6

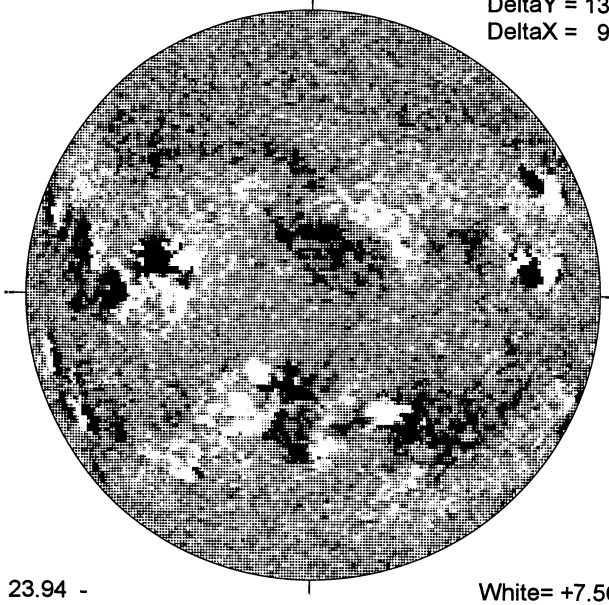

-W

White= +7.5G
Black = -7.5G

MEUDON H-ALPHA

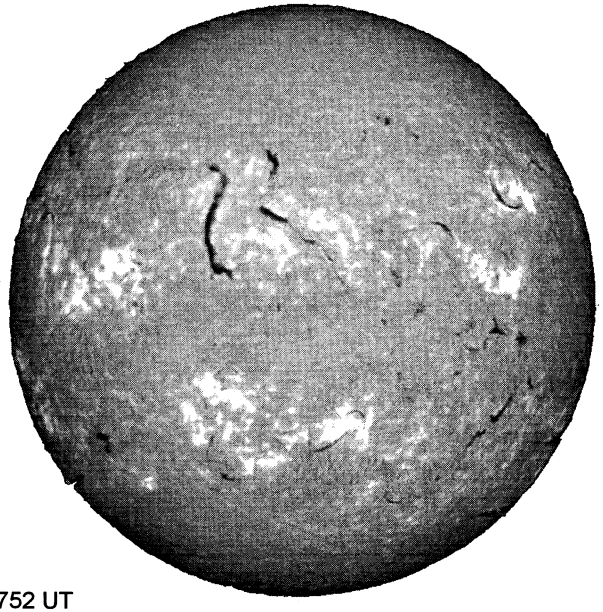

E-

0752 UT

S

RAMEY SUNSPOT

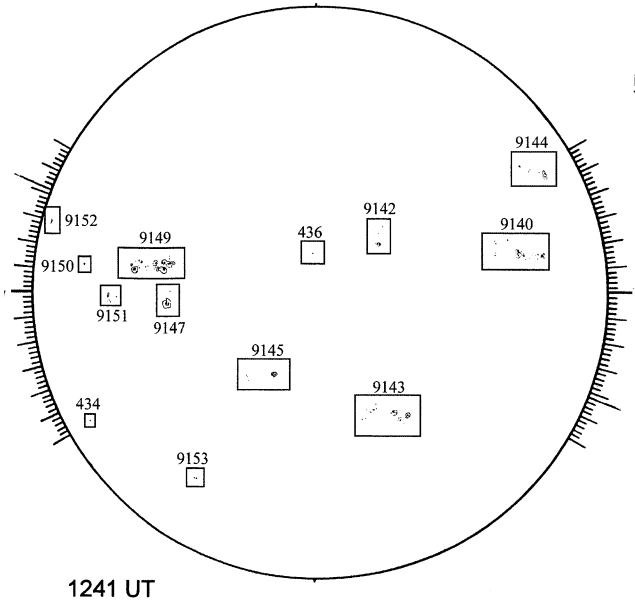

1241 UT

S

SACRAMENTO PEAK CORONA (1.15 Radii)

NSO / SACRAMENTO PEAK CORONAL DATA
TICK MARKS EVERY 20 MILLIONTHS

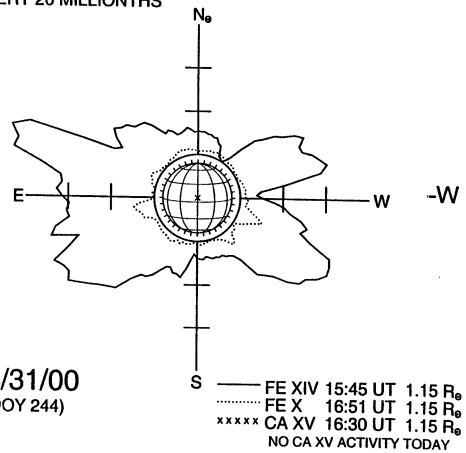

08/31/00
(DOY 244)

-W

S