AUGUST 23, 2000 (P= 18.65, Bo = 6.98, Lo = 145.03)

KITT PEAK MAGNETOGRAM

Bright = +
Dark = -

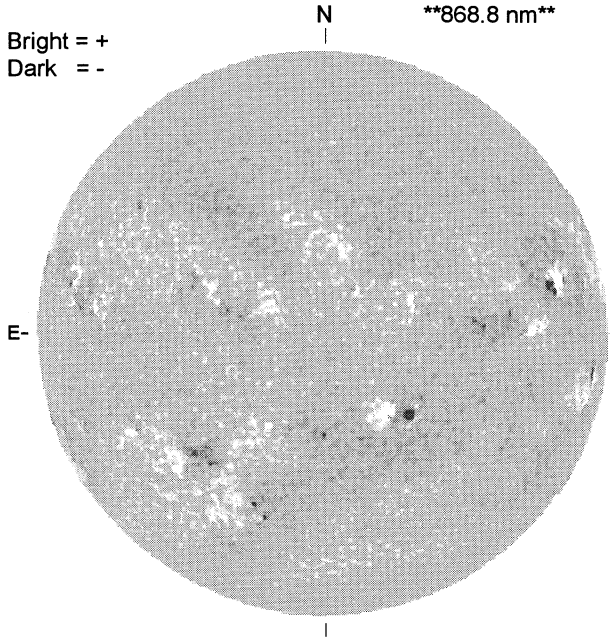

1855 UT

STANFORD MAGNETOGRAM

Solid = +
Dashed = -

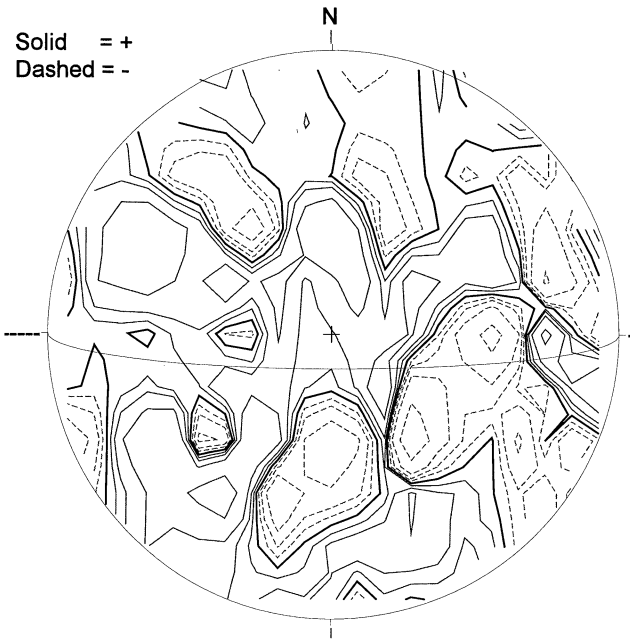

1706 UT

MT. WILSON MAGNETOGRAM

DeltaY = 13.1
DeltaX = 9.6

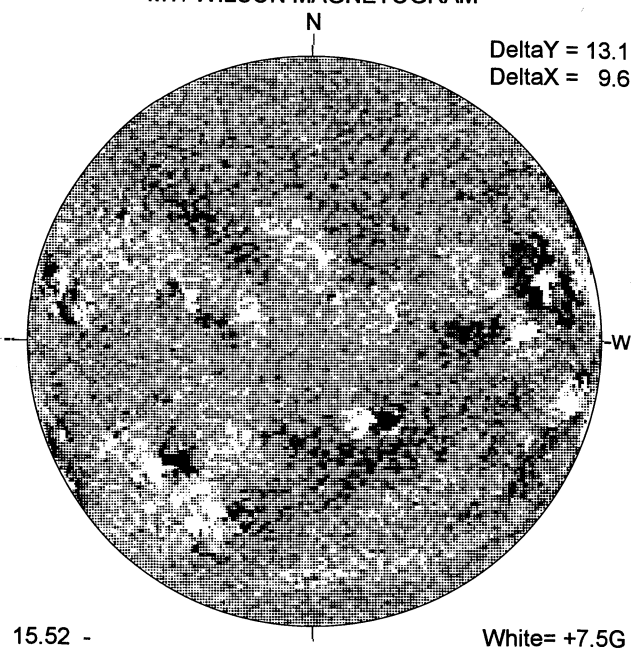

15.52 -
16.45 UT

White= +7.5G
Black = -7.5G

MEUDON H-ALPHA

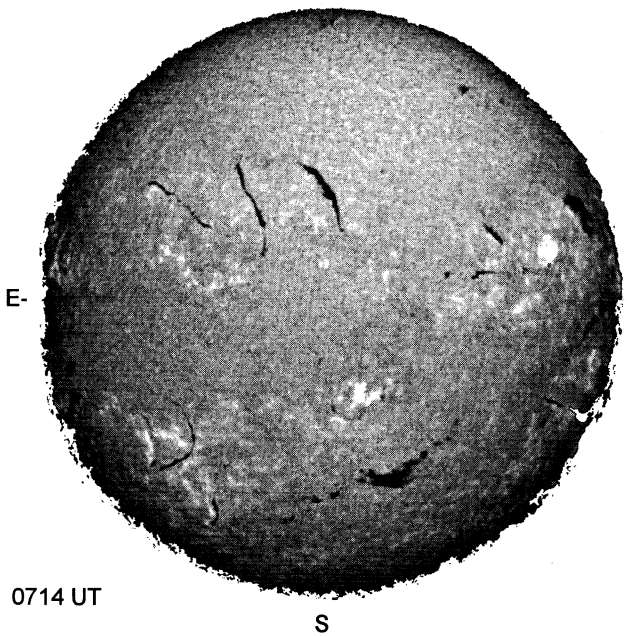

0714 UT

HOLLOMAN SUNSPOT

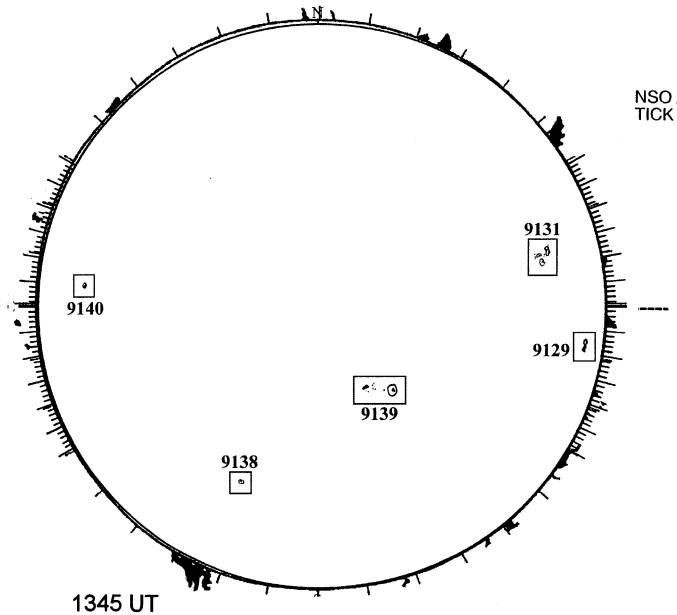

1345 UT
0844 UT LOMN Prom S

SACRAMENTO PEAK CORONA (1.15 Radii)

NSO / SACRAMENTO PEAK CORONAL DATA
TICK MARKS EVERY 20 MILLIONTHS

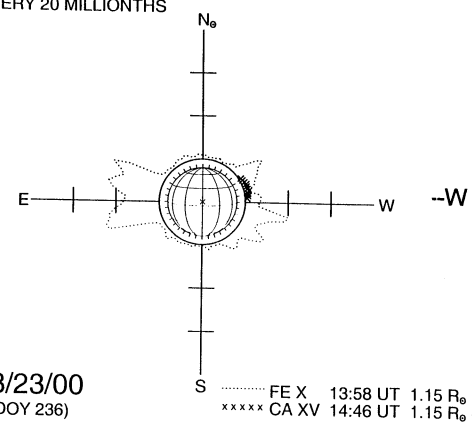

08/23/00
(DOY 236)

FE X 13:58 UT 1.15 R☉
xxxxx CA XV 14:46 UT 1.15 R☉

S