AUGUST 19, 2000 (P= 17.41, Bo = 6.84, Lo = 197.89)

KITT PEAK MAGNETOGRAM

Bright = +
Dark = -

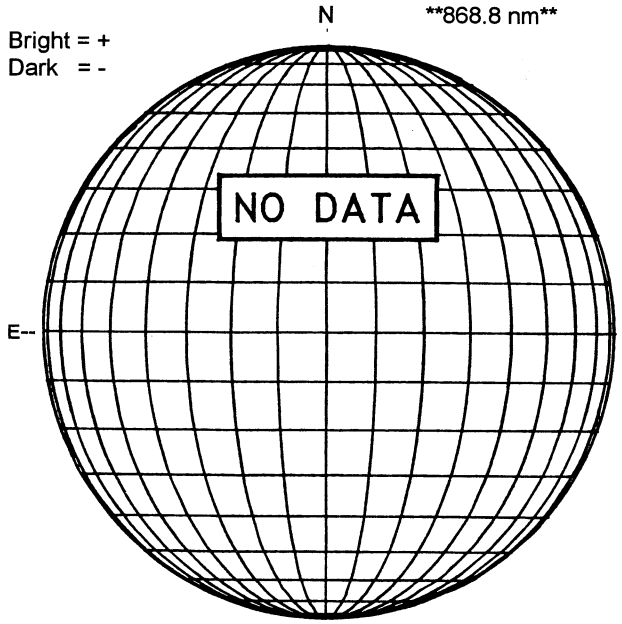

STANFORD MAGNETOGRAM

Solid = +
Dashed = -

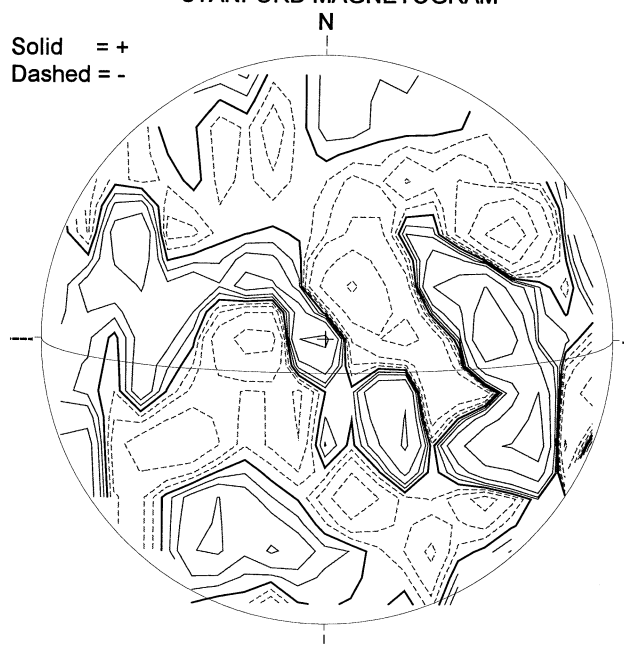

2214 UT

MT. WILSON MAGNETOGRAM

DeltaY = 13.1
DeltaX = 9.6

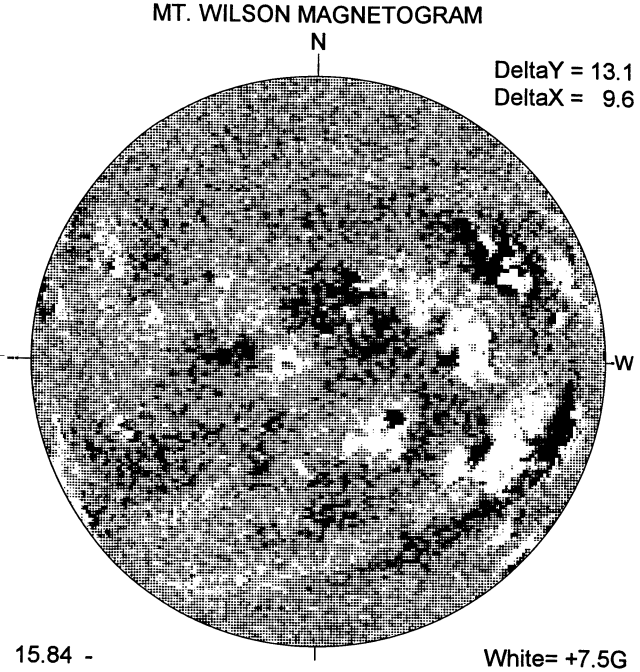

15.84 -
16.76 UT

White= +7.5G
Black = -7.5G

MEUDON H-ALPHA

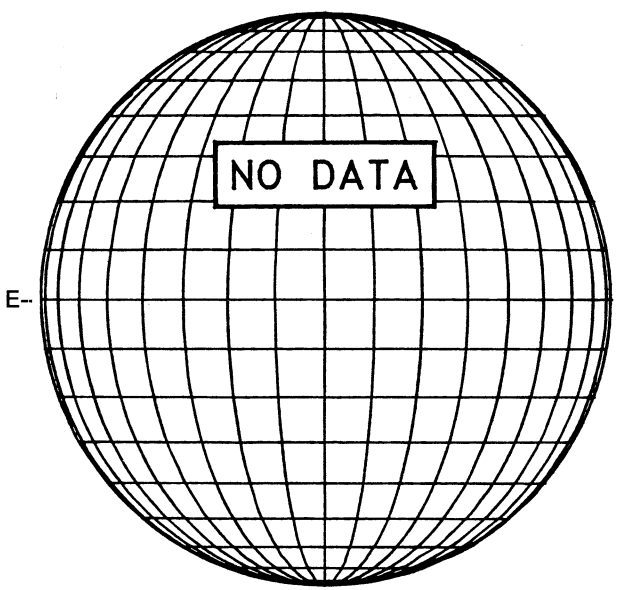

S

RAMEY SUNSPOT

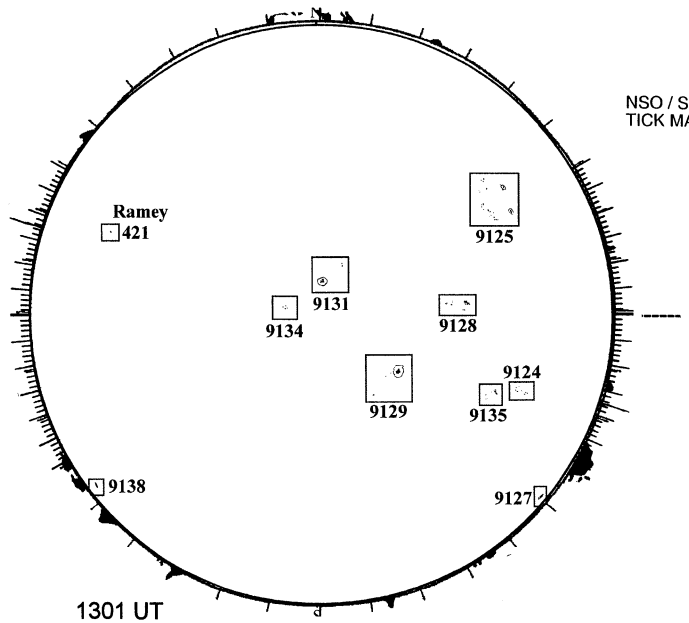

1301 UT
0741 UT LOMN Prom S

SACRAMENTO PEAK CORONA (1.15 Radii)

NSO / SACRAMENTO PEAK CORONAL DATA
TICK MARKS EVERY 20 MILLIONTHS

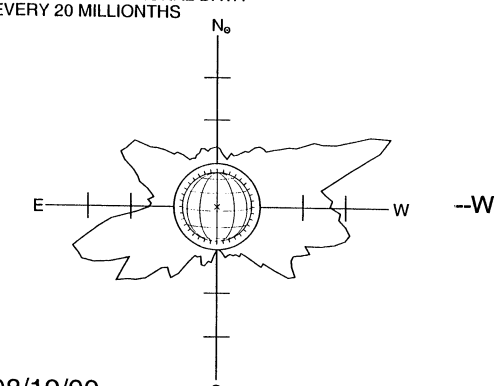

08/19/00
(DOY 232)

FE XIV 16:21 UT 1.15 $R_\odot$
xxxxx CA XV 16:57 UT 1.15 $R_\odot$
NO CA XV ACTIVITY TODAY

S