AUGUST 17, 2000 (P= 16.76, Bo = 6.75, Lo = 224.33)

KITT PEAK MAGNETOGRAM

Bright = +
Dark = -

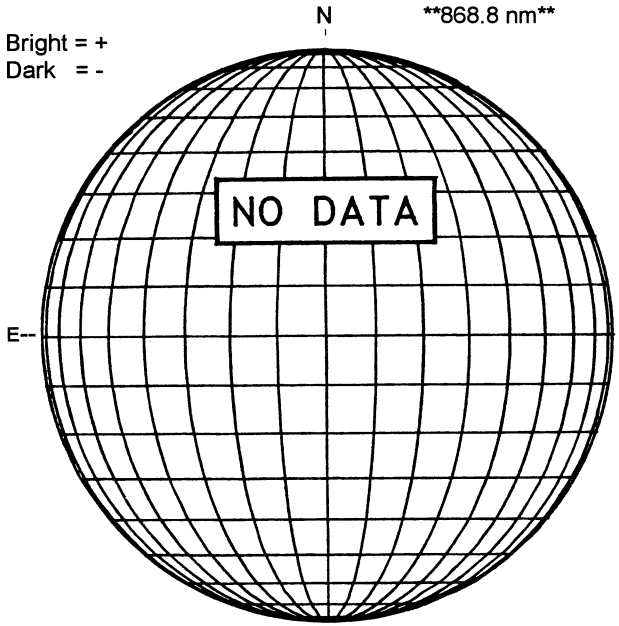

STANFORD MAGNETOGRAM

Solid = +
Dashed = -

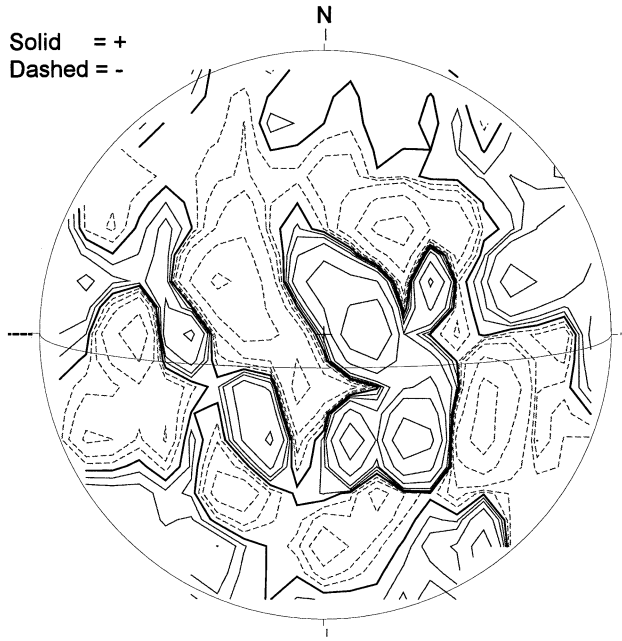

1926 UT

MT. WILSON MAGNETOGRAM

DeltaY = 13.1
DeltaX = 9.6

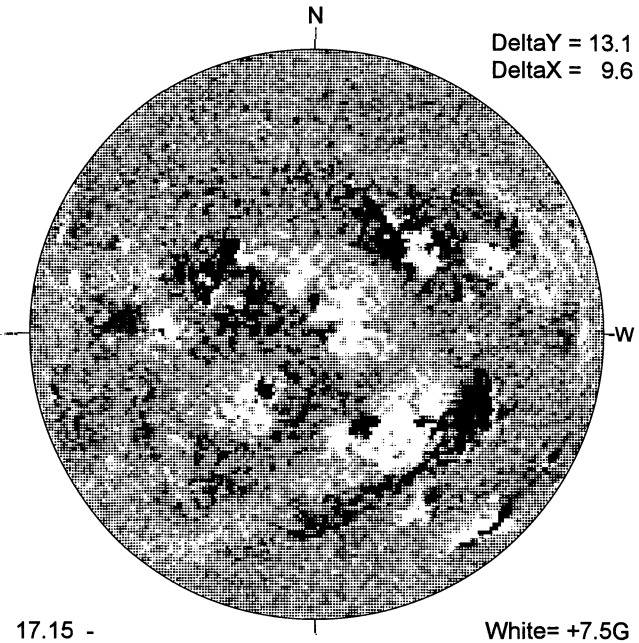

17.15 -
18.08 UT

White= +7.5G
Black = -7.5G

MEUDON H-ALPHA

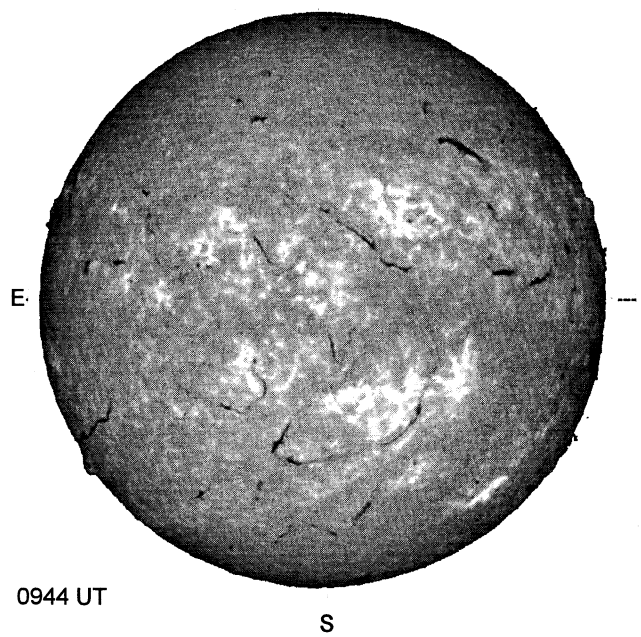

0944 UT

RAMEY SUNSPOT

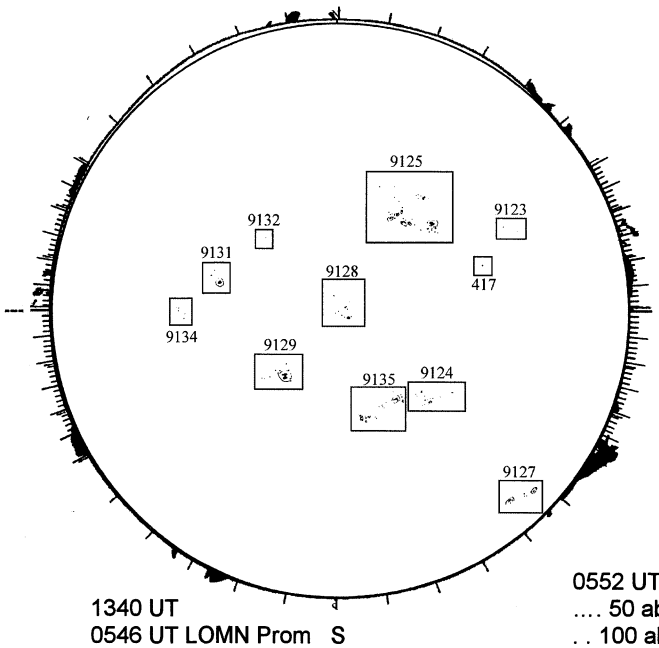

1340 UT
0546 UT LOMN Prom

LOMNICKY PEAK CORONA (1.04 Radii)----

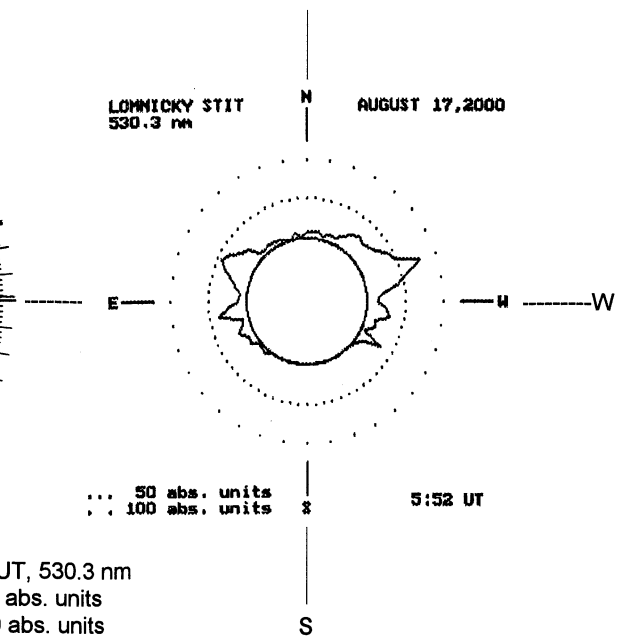

0552 UT, 530.3 nm
.... 50 abs. units
. . 100 abs. units