AUGUST 15, 2000 (P= 16.09, Bo = 6.66, Lo = 250.76)

KITT PEAK MAGNETOGRAM

Bright = +
Dark = -

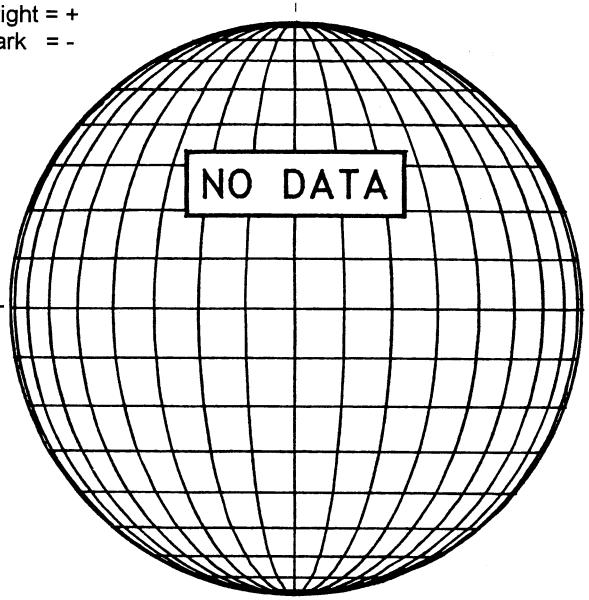

STANFORD MAGNETOGRAM

Solid = +
Dashed = -

1834 UT

MT. WILSON MAGNETOGRAM

DeltaY = 13.1
DeltaX = 9.6

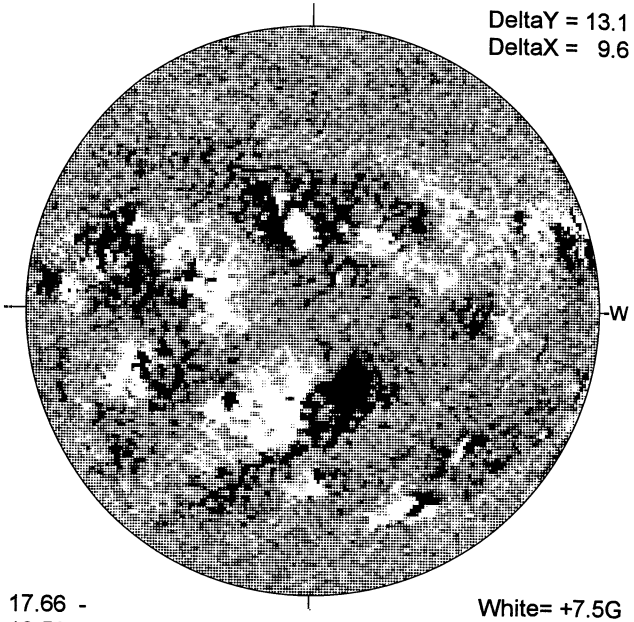

17.66 -
18.59 UT

White= +7.5G
Black = -7.5G

MEUDON H-ALPHA

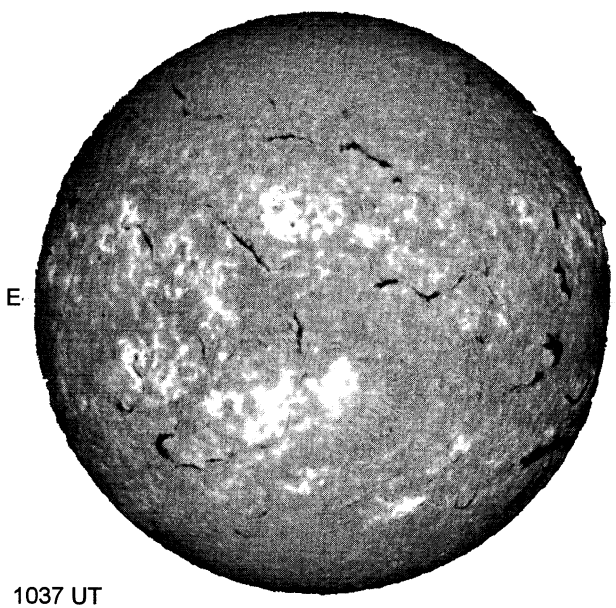

1037 UT

S

RAMEY SUNSPOT

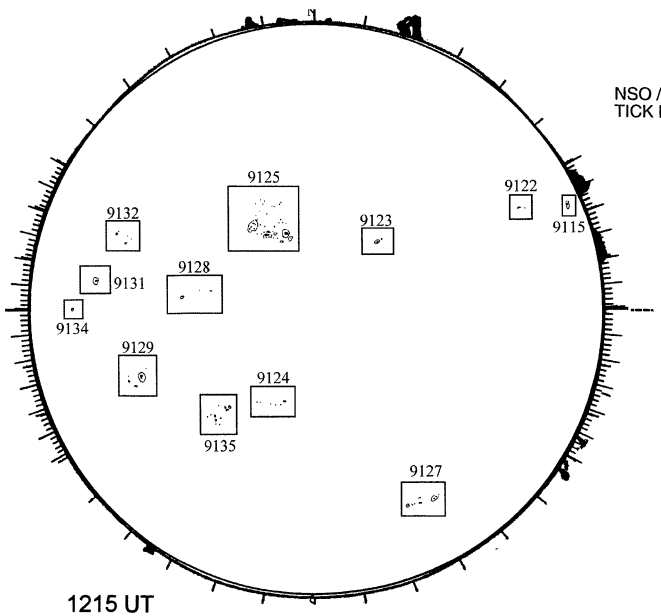

1215 UT
0737 UT LOMN Prom S

SACRAMENTO PEAK CORONA (1.15 Radii)----

NSO / SACRAMENTO PEAK CORONAL DATA
TICK MARKS EVERY 20 MILLIONTHS

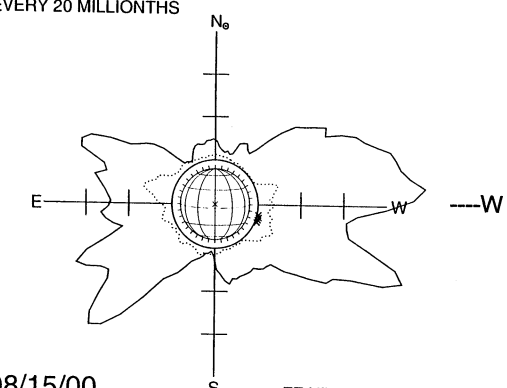

08/15/00
(DOY 228)

FE XIV 15:12 UT 1.15 R☉
FE X 14:25 UT 1.15 R☉
xxxxx CA XV 15:48 UT 1.15 R☉

S