AUGUST 2, 2000 (P= 11.32, Bo = 5.88, Lo = 62.65)

KITT PEAK MAGNETOGRAM

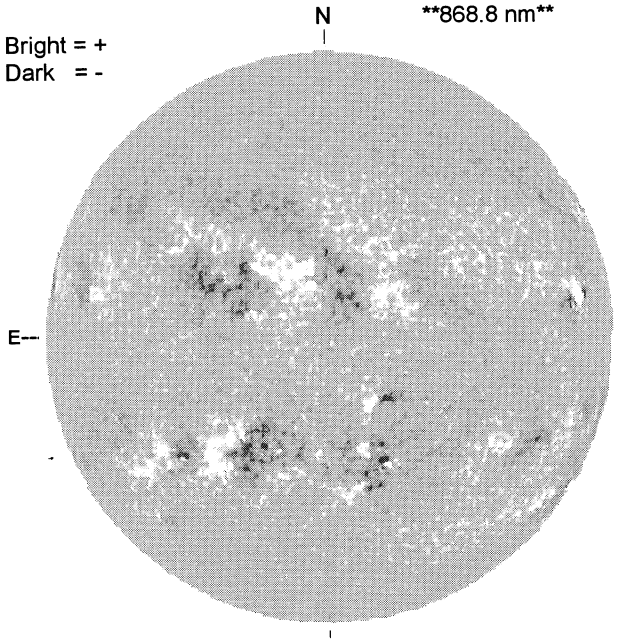

1630 UT

STANFORD MAGNETOGRAM

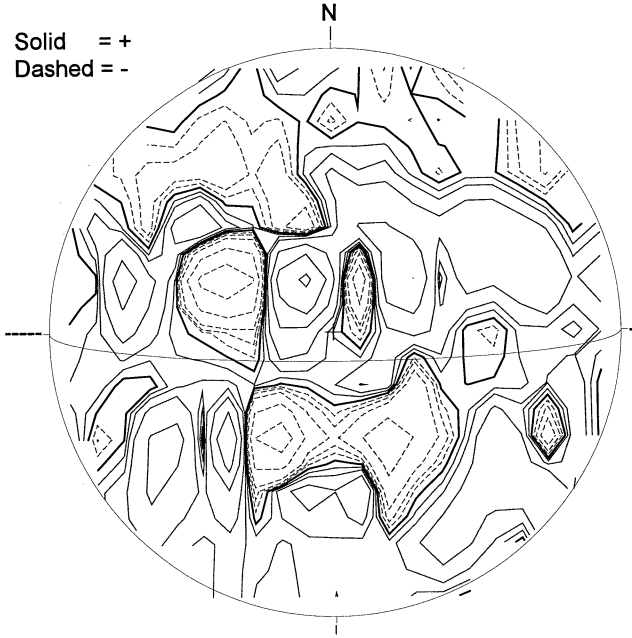

1943 UT

MT. WILSON MAGNETOGRAM

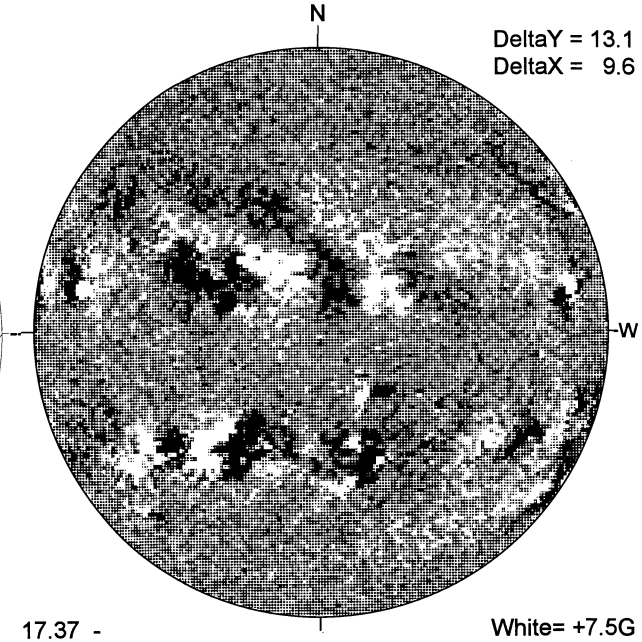

17.37 -
18.29 UT

MEUDON H-ALPHA

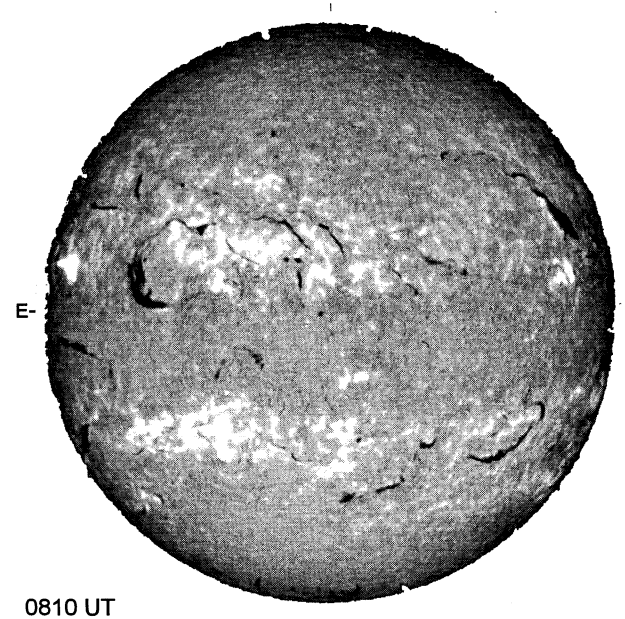

0810 UT

RAMEY SUNSPOT

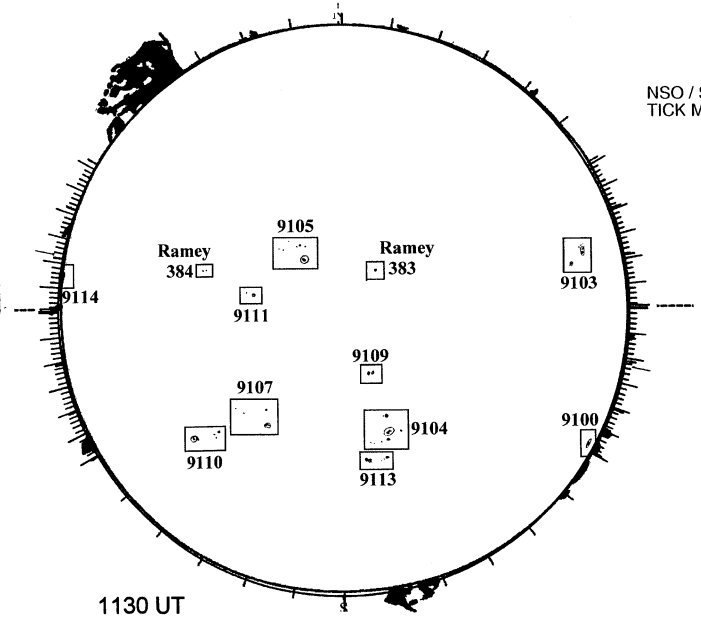

1130 UT
0504 UT LOMN Prom

SACRAMENTO PEAK CORONA (1.15 Radii)----

NSO / SACRAMENTO PEAK CORONAL DATA
TICK MARKS EVERY 20 MILLIONTHS

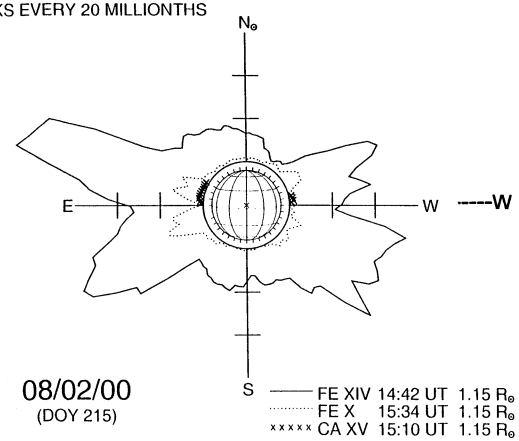

08/02/00
(DOY 215)

S