AUGUST 1, 2000 (P= 10.93, Bo = 5.81, Lo = 75.87)

KITT PEAK MAGNETOGRAM

N

868.8 nm

Bright = +
Dark = -

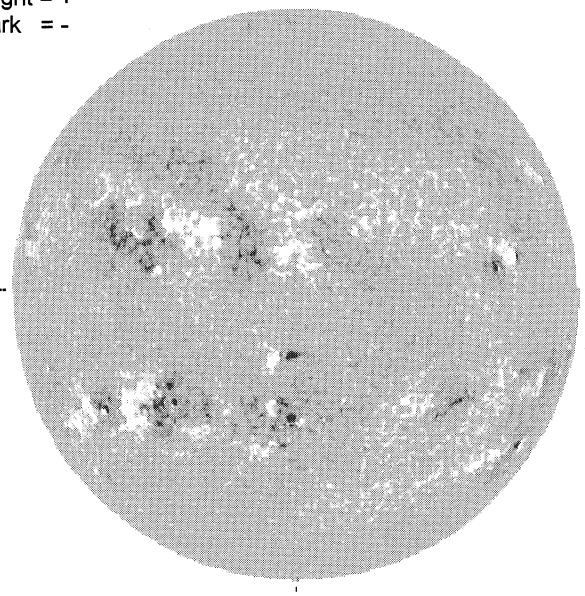

E---

1618 UT

STANFORD MAGNETOGRAM

N

Solid = +
Dashed = -

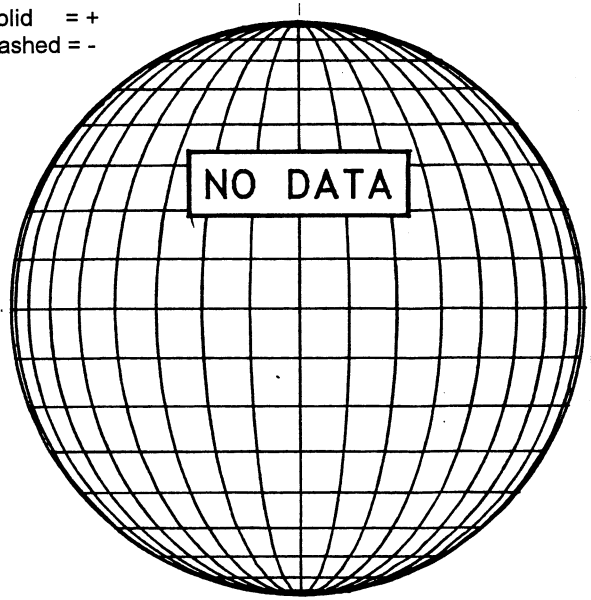

17.48 -
18.01 UT

MT. WILSON MAGNETOGRAM

N

DeltaY = 20.1
DeltaX = 12.9

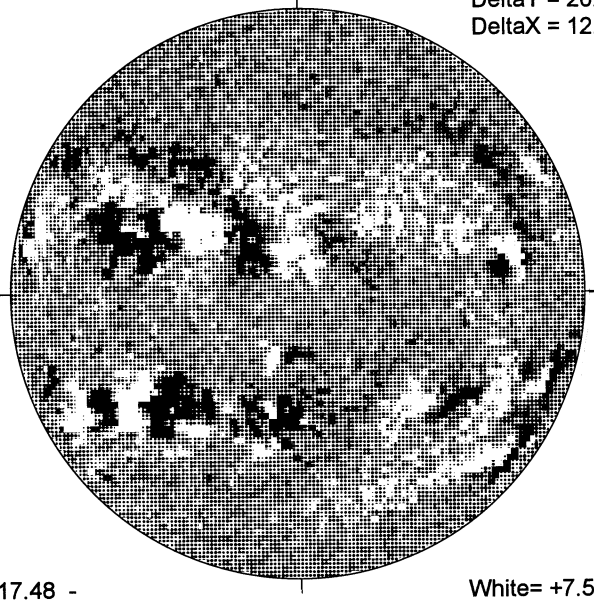

-W

White= +7.5G
Black = -7.5G

MEUDON H-ALPHA

E-

0724 UT

S

RAMEY SUNSPOT

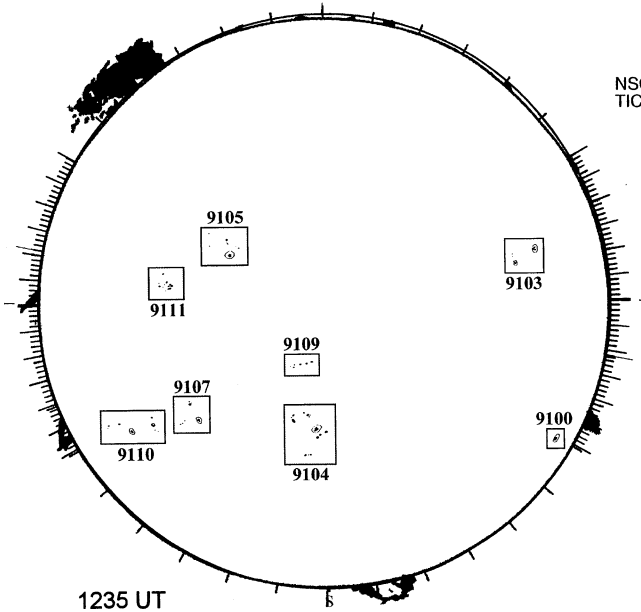

1235 UT
1426 UT LOMN Prom S

SACRAMENTO PEAK CORONA (1.15 Radii)----

NSO / SACRAMENTO PEAK CORONAL DATA
TICK MARKS EVERY 20 MILLIONTHS

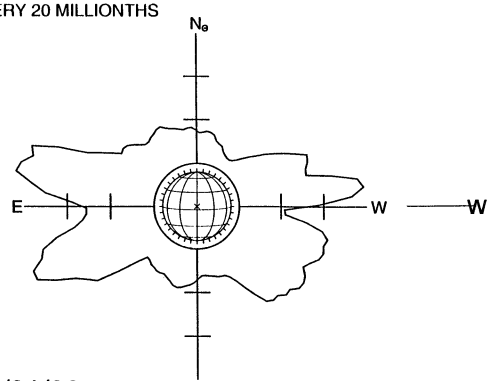

08/01/00
(DOY 214)

FE XIV 14:52 UT 1.15 R☉

S