JULY 20, 2000 ( P= 5.94, Bo = 4.83, Lo = 234.61)

KITT PEAK MAGNETOGRAM

**868.8 nm**

Bright = +
Dark = -

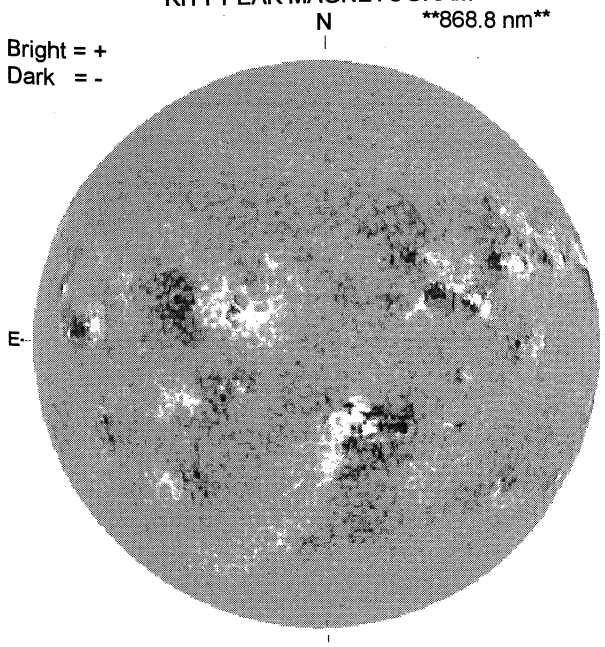


1617 UT

STANFORD MAGNETOGRAM

Solid = +
Dashed = -

2135 UT

MT. WILSON MAGNETOGRAM

DeltaY = 13.1
DeltaX = 9.6

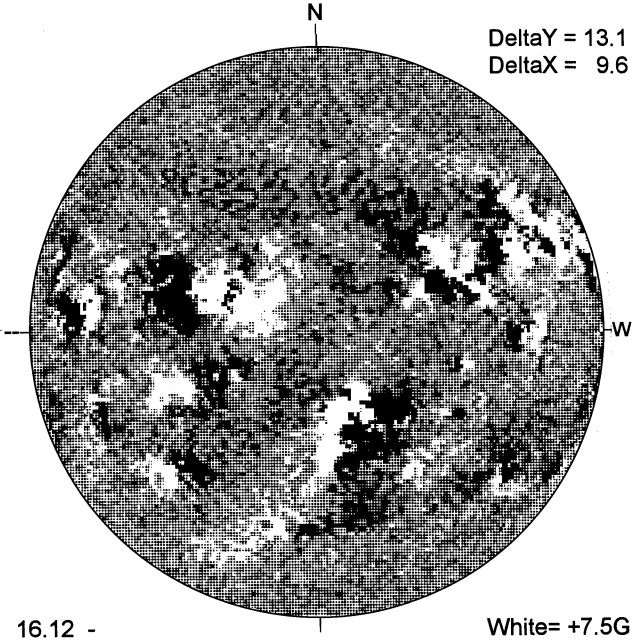


16.12 -
17.04 UT

White= +7.5G
Black = -7.5G

MEUDON H-ALPHA

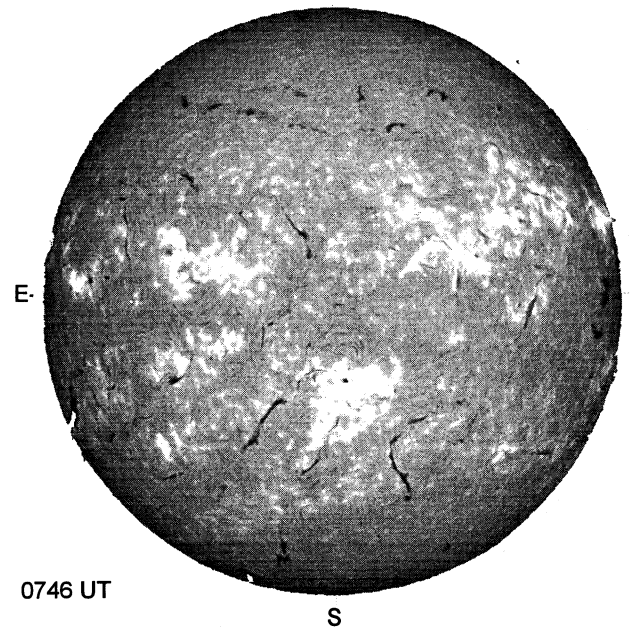


0746 UT

RAMEY SUNSPOT

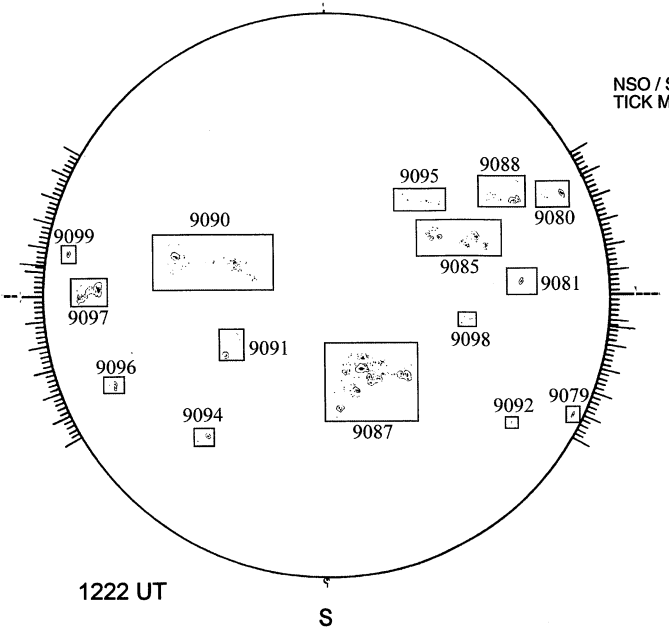


1222 UT

SACRAMENTO PEAK CORONA (1.15 Radii)

NSO / SACRAMENTO PEAK CORONAL DATA
TICK MARKS EVERY 20 MILLIONTHS

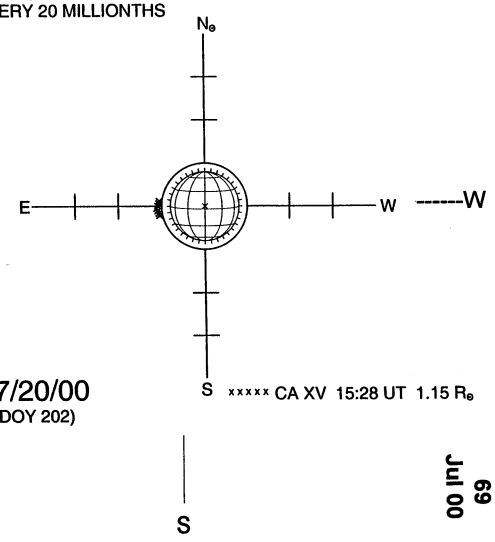


07/20/00
(DOY 202)

xxxxx CA XV 15:28 UT 1.15 R

Jul 00
69