**JULY 10, 2000 ( P= 1.51, Bo = 3.87 Lo = 6.94)**

KITT PEAK MAGNETOGRAM

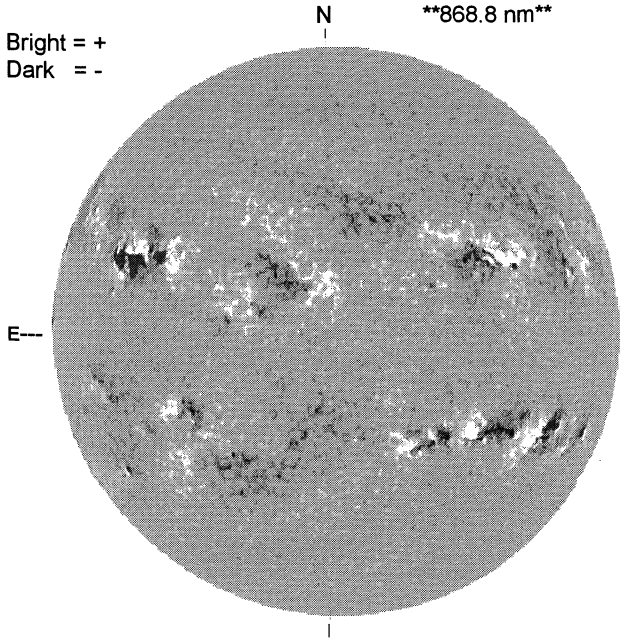


STANFORD MAGNETOGRAM

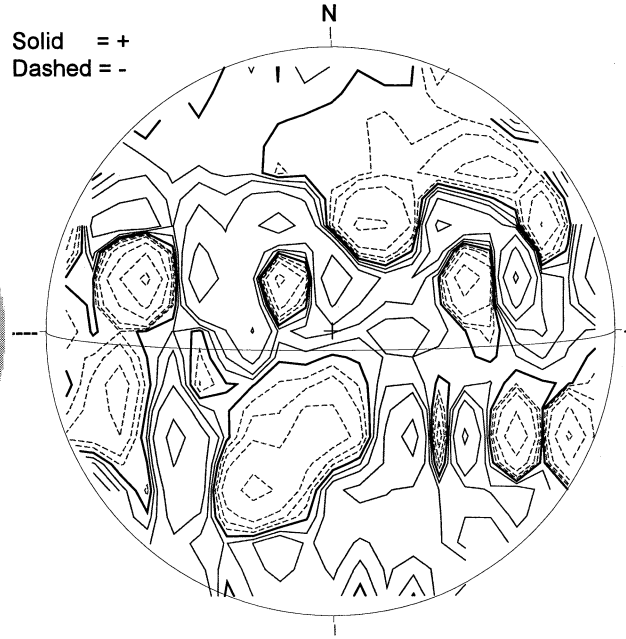


MT. WILSON MAGNETOGRAM

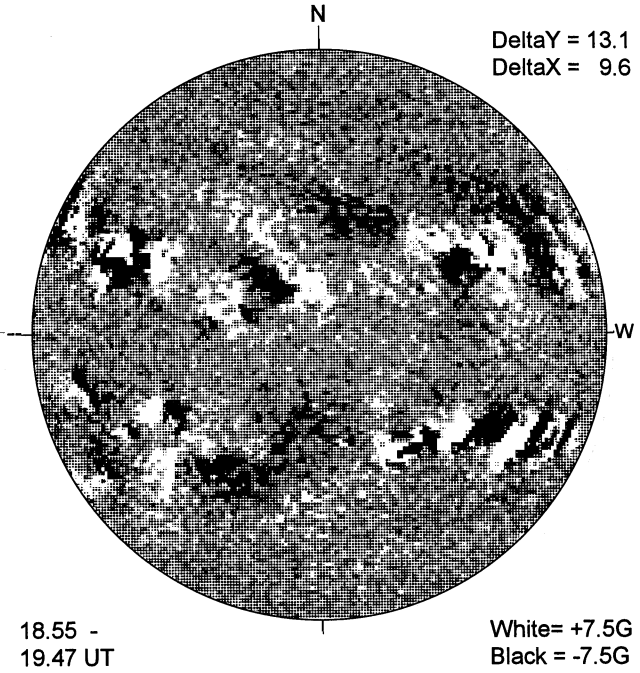


MEUDON H-ALPHA

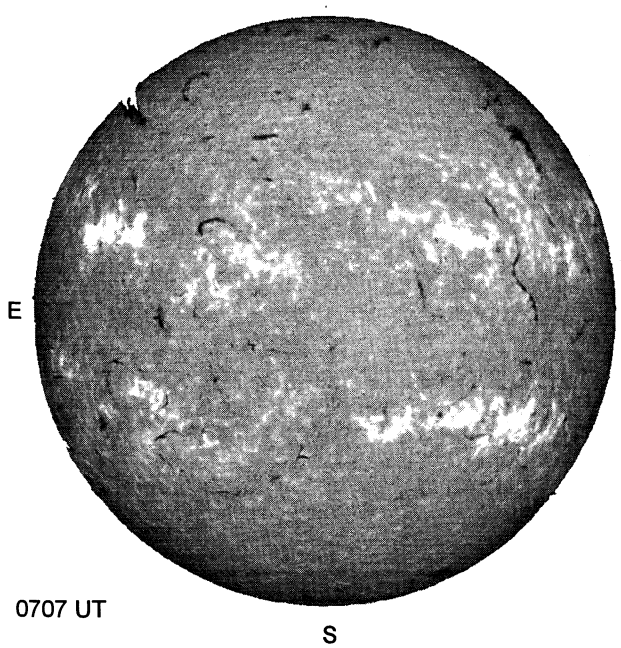


RAMEY SUNSPOTS

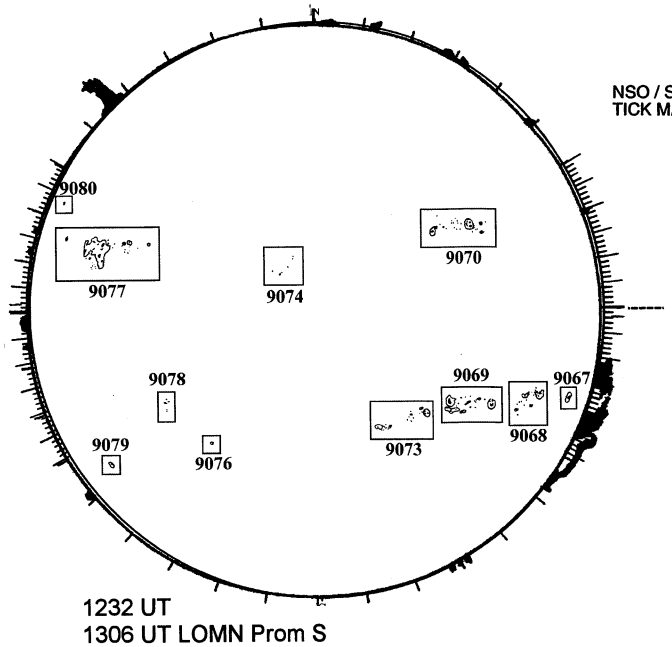

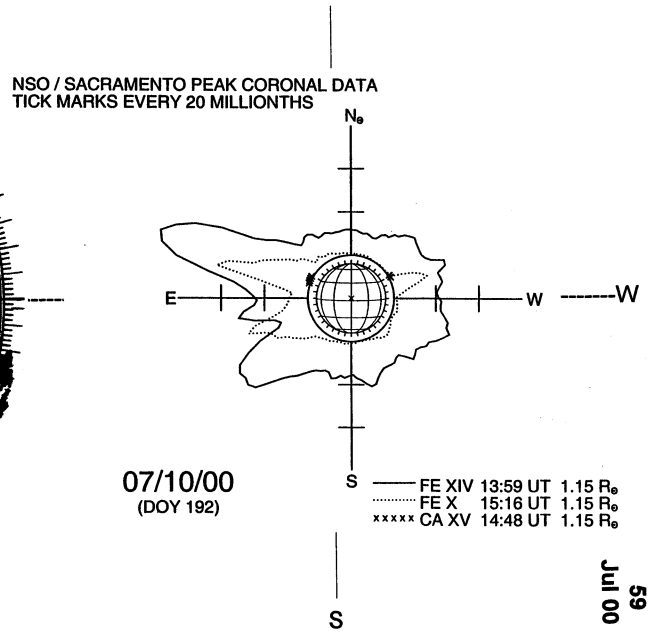
SACRAMENTO PEAK CORONA (1.15 Radii)----