JULY 8, 2000 (P= 0.61, Bo = 3.66, Lo = 33.41)

KITT PEAK MAGNETOGRAM

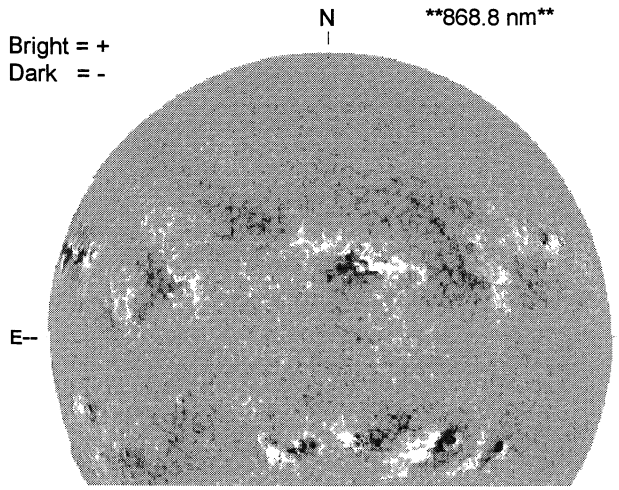

1419 UT

STANFORD MAGNETOGRAM

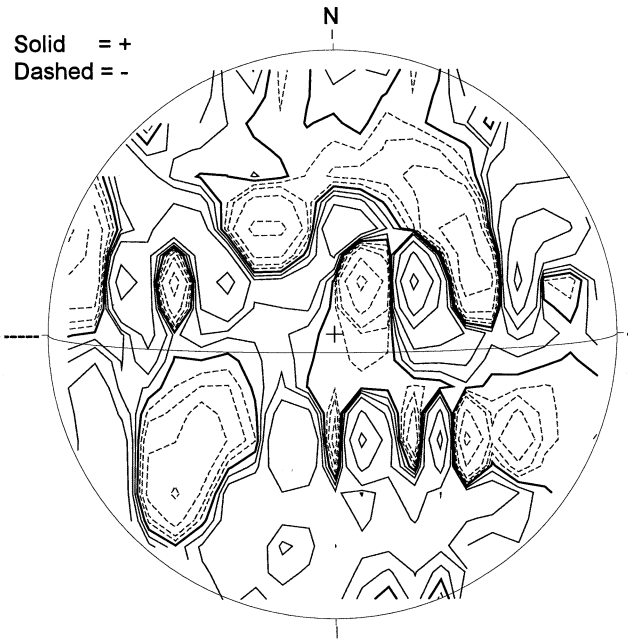

2333 UT

MT. WILSON MAGNETOGRAM

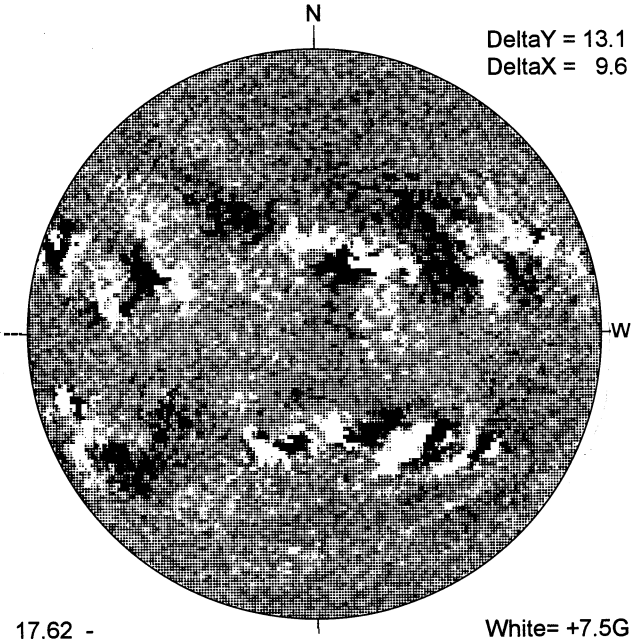

17.62 -
18.53 UT

MEUDON H-ALPHA

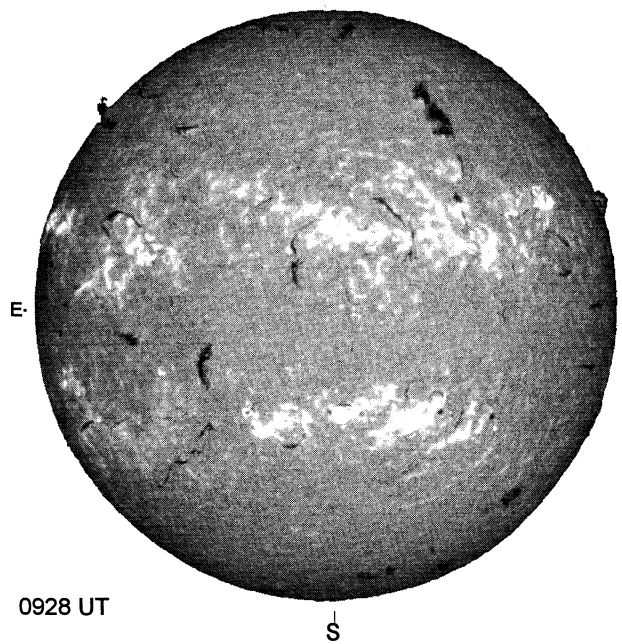

0928 UT

RAMEY SUNSPOT

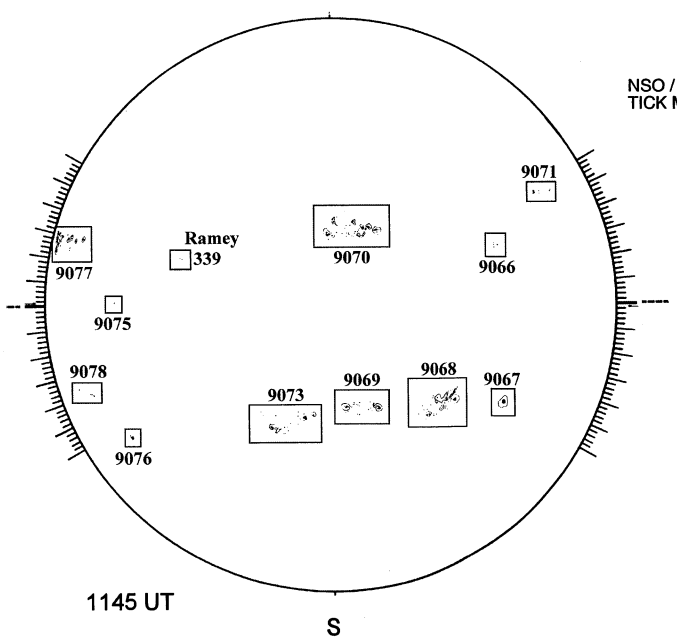

1145 UT

SACRAMENTO PEAK CORONA (1.15 Radii)----

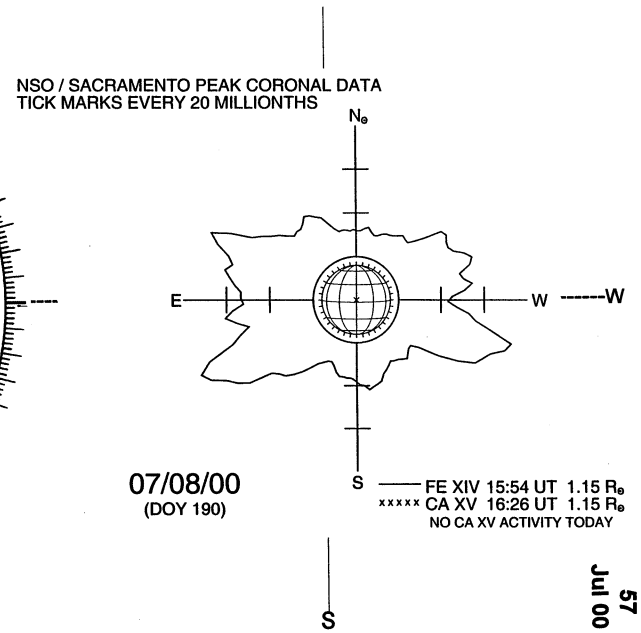

07/08/00
(DOY 190)

57
Jul 00