JULY 7, 2000 (P= 0.16, Bo = 3.56, Lo = 46.64)

KITT PEAK MAGNETOGRAM

868.8 nm

Bright = +
Dark = -

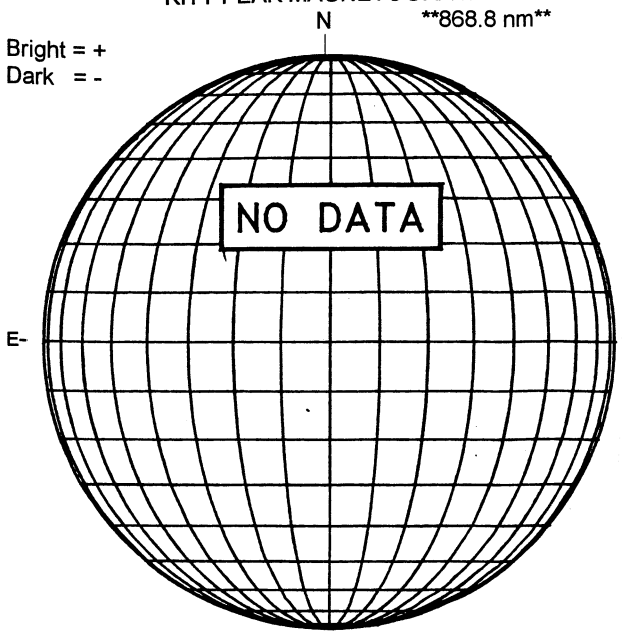

STANFORD MAGNETOGRAM

Solid = +
Dashed = -

2333 UT

MT. WILSON MAGNETOGRAM

DeltaY = 13.1
DeltaX = 9.6

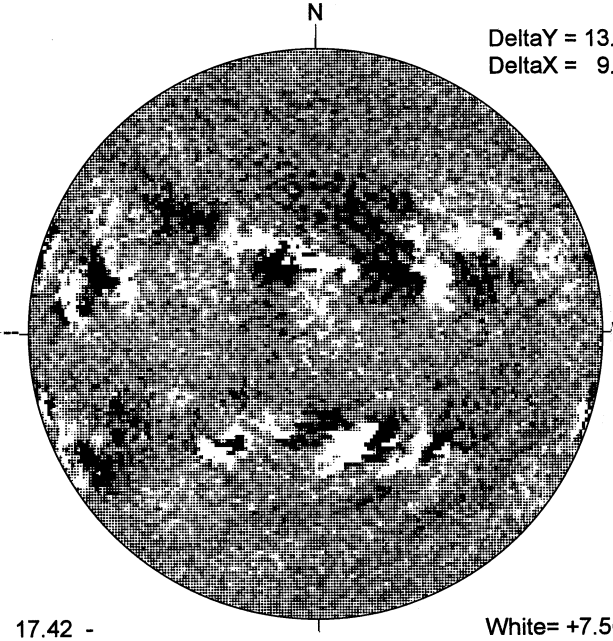

17.42 -
18.33 UT

White= +7.5G
Black = -7.5G

MEUDON H-ALPHA

0738 UT

RAMEY SUNSPOTS

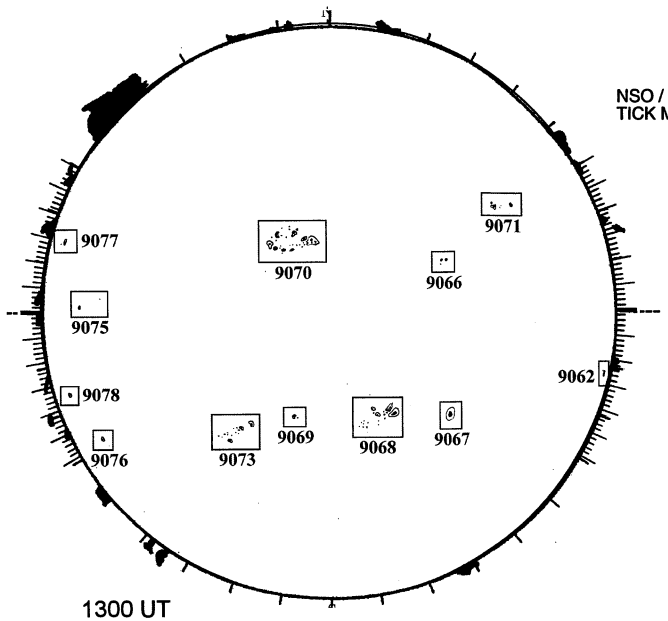

1300 UT
0513 UT LOMN Prom S

SACRAMENTO PEAK CORONA (1.15 Radii)

NSO / SACRAMENTO PEAK CORONAL DATA
TICK MARKS EVERY 20 MILLIONTHS

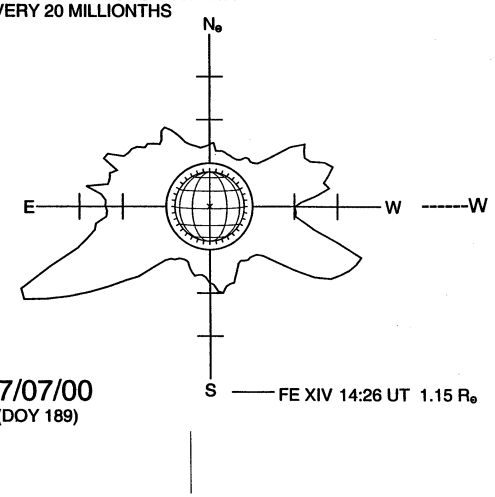

07/07/00
(DOY 189)