JULY 5, 2000 (P= -0.75, Bo = 3.34, Lo = 73.11)

KITT PEAK MAGNETOGRAM

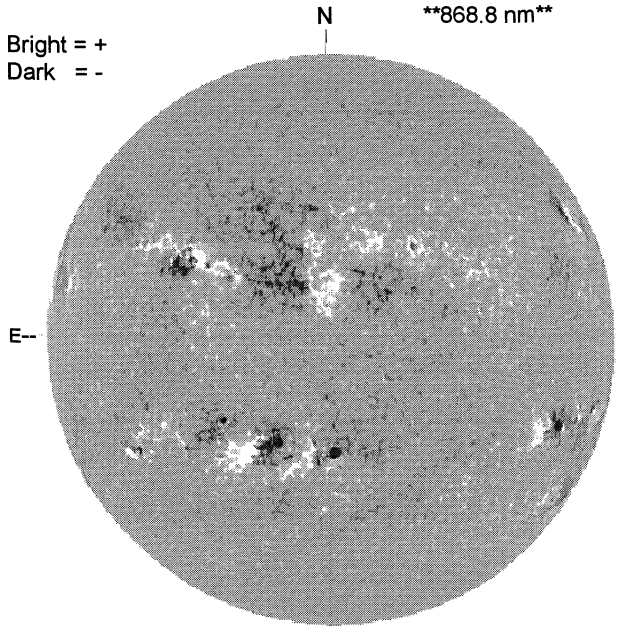

1548 UT

STANFORD MAGNETOGRAM

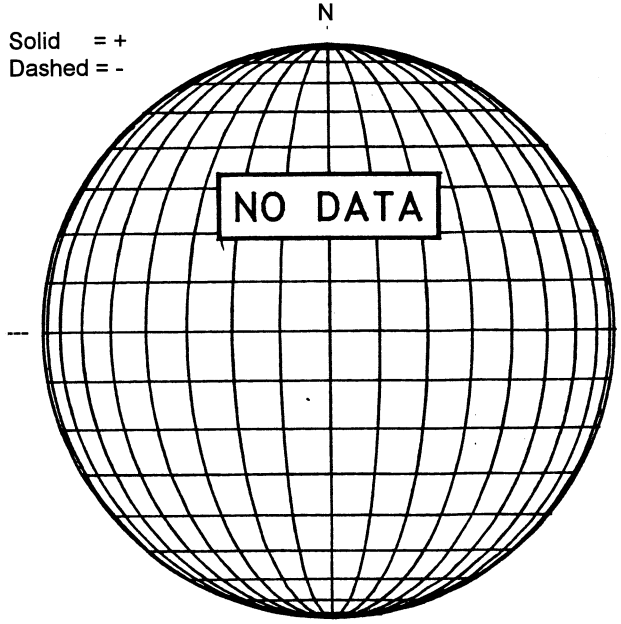

MT. WILSON MAGNETOGRAM

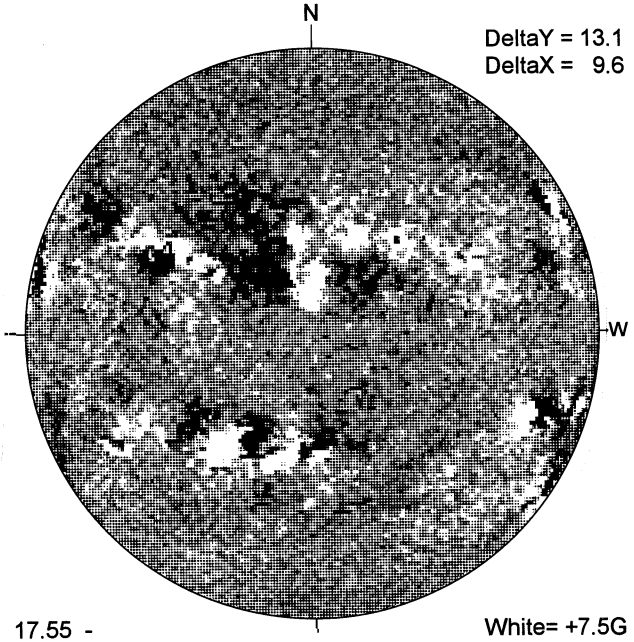

17.55 -
18.47 UT

White= +7.5G
Black = -7.5G

MEUDON H-ALPHA

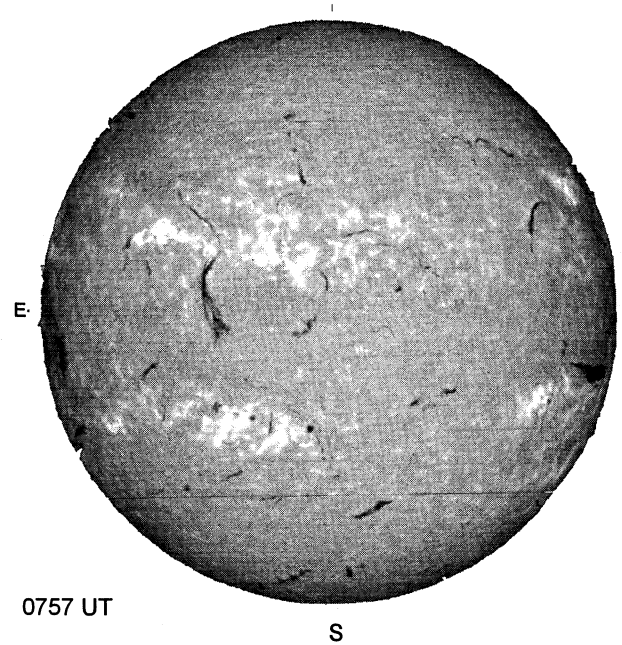

0757 UT

RAMEY SUNSPOT

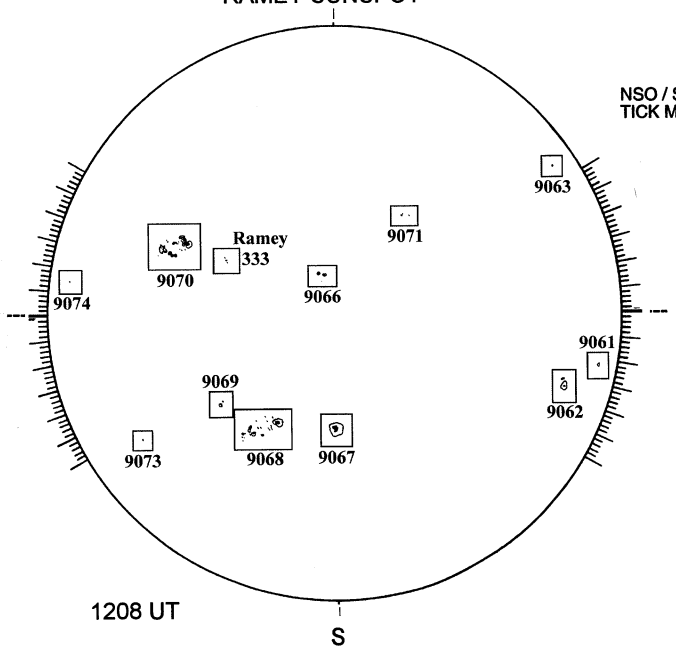

1208 UT

SACRAMENTO PEAK CORONA (1.15 Radii)

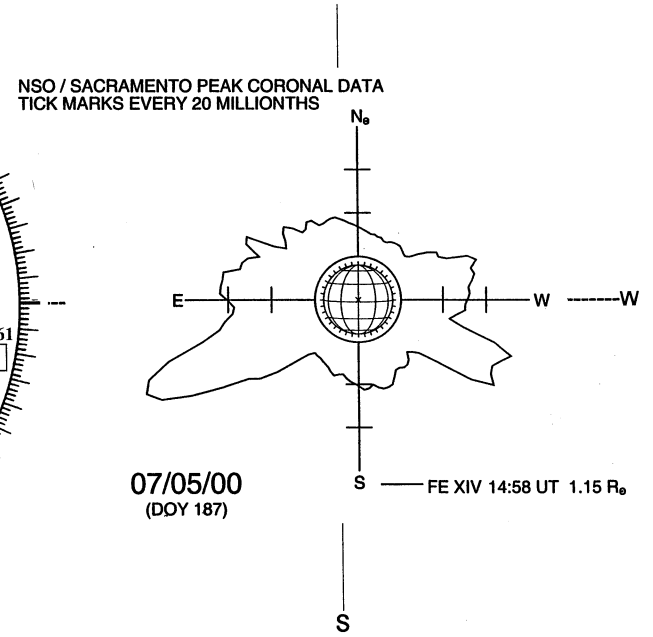

07/05/00
(DOY 187)