# JULY 3, 2000 ( P= -1.66, Bo = 3.13, Lo = 99.59)

## KITT PEAK MAGNETOGRAM

Bright = +
Dark = -

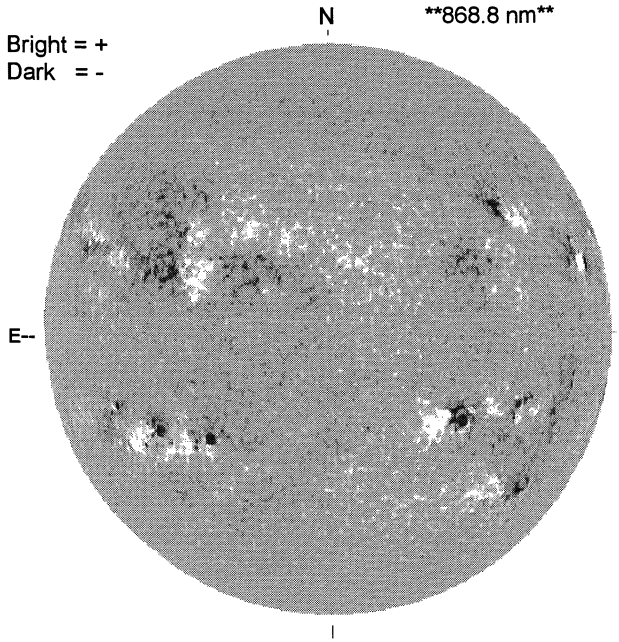


1434 UT

## STANFORD MAGNETOGRAM

Solid = +
Dashed = -

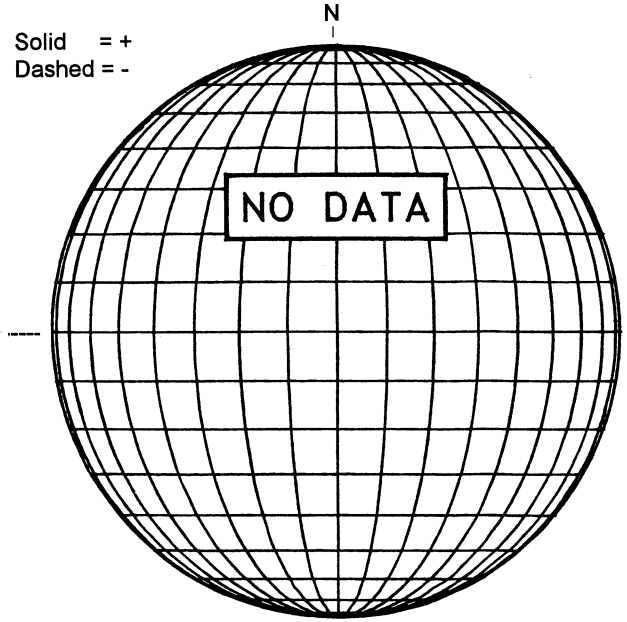


17.08 -
17.99 UT

## MT. WILSON MAGNETOGRAM

DeltaY = 13.1
DeltaX = 9.6

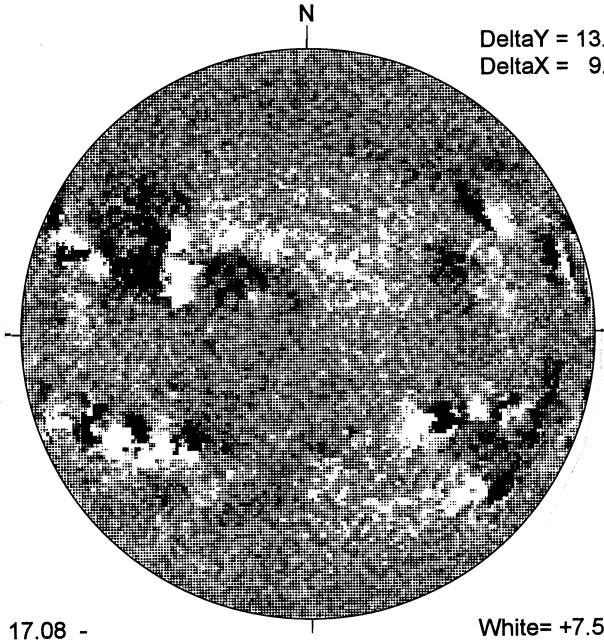


White= +7.5G
Black = -7.5G

## MEUDON H-ALPHA

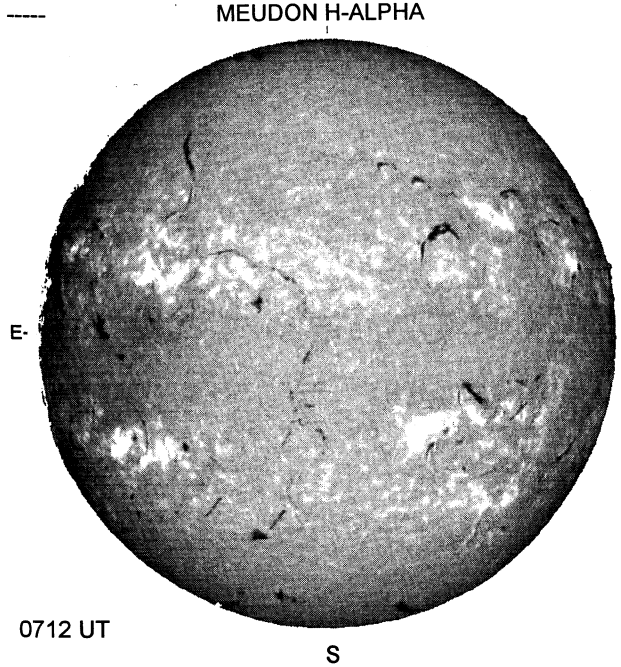


0712 UT

## RAMEY SUNSPOT

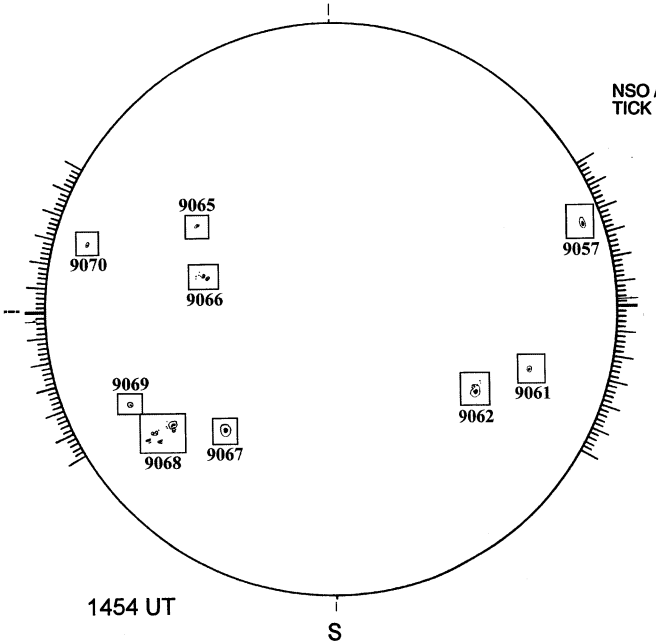


1454 UT

## SACRAMENTO PEAK CORONA (1.15 Radii)----

NSO / SACRAMENTO PEAK CORONAL DATA
TICK MARKS EVERY 20 MILLIONTHS

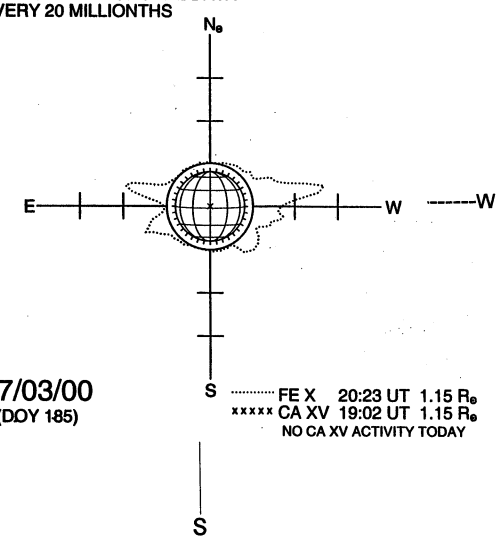


07/03/00
(DOY 185)

FE X 20:23 UT 1.15 $R_\odot$
xxxxx CA XV 19:02 UT 1.15 $R_\odot$
NO CA XV ACTIVITY TODAY