JUNE 20, 2000 (P= -7.50, Bo = 1.65, Lo = 271.66)

KITT PEAK MAGNETOGRAM

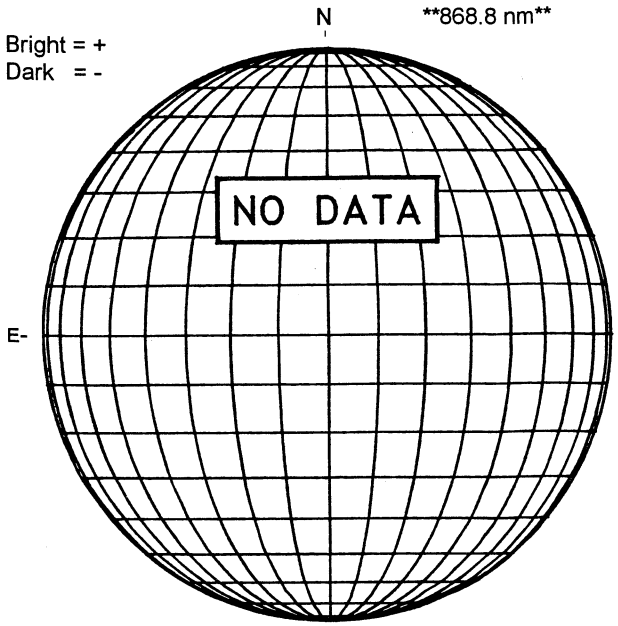

STANFORD MAGNETOGRAM

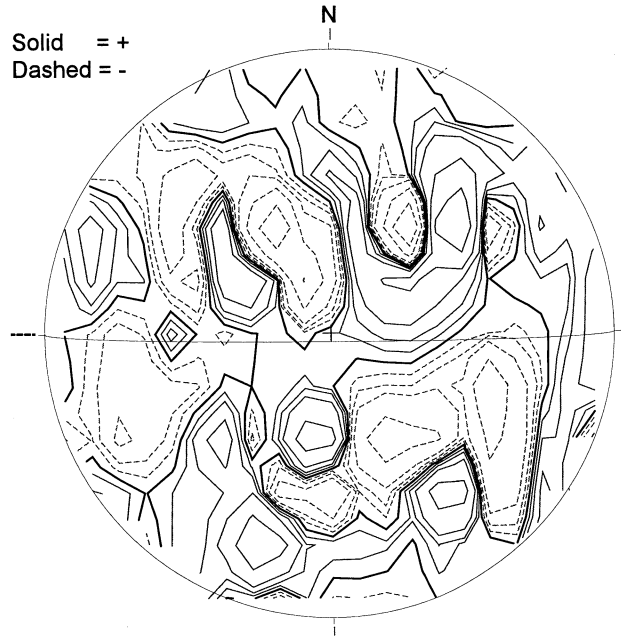

2141 UT

MT. WILSON MAGNETOGRAM

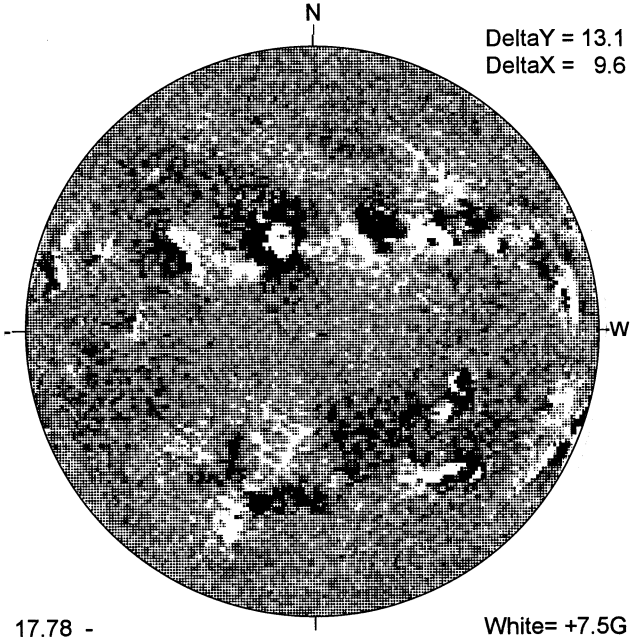

17.78 -
18.70 UT

MEUDON H-ALPHA

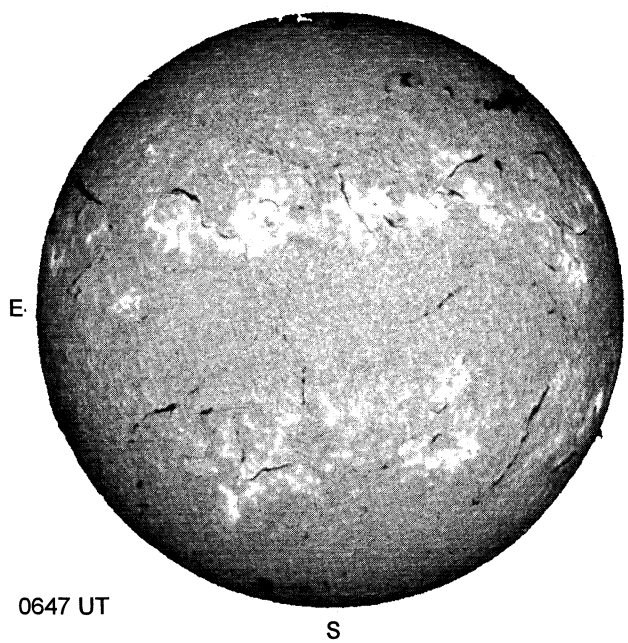

0647 UT

RAMEY SUNSPOT

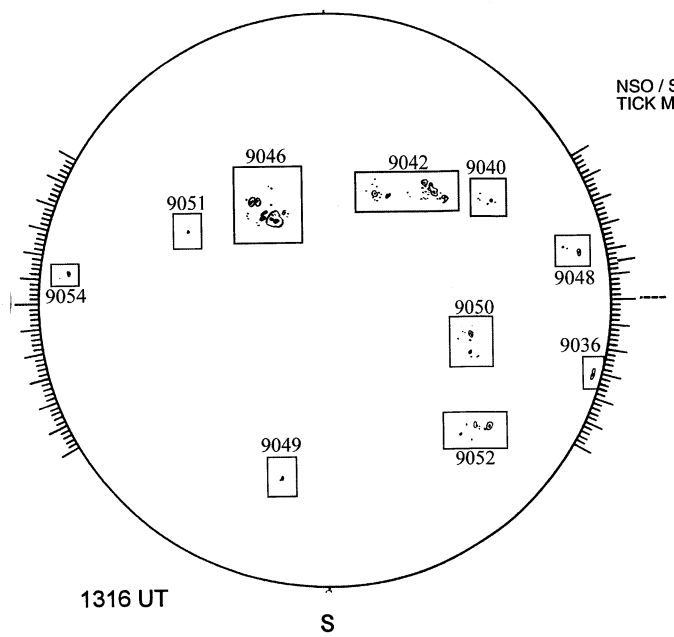

1316 UT

SACRAMENTO PEAK CORONA (1.15 Radii)----

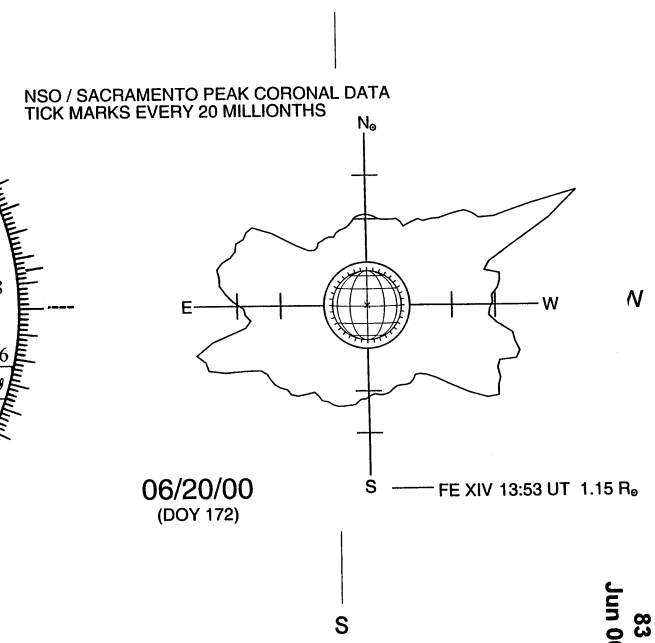

83
Jun 00