JUNE 15, 2000 (P= -9.68, Bo = 1.06, Lo = 337.85)

KITT PEAK MAGNETOGRAM

Bright = +
Dark = -

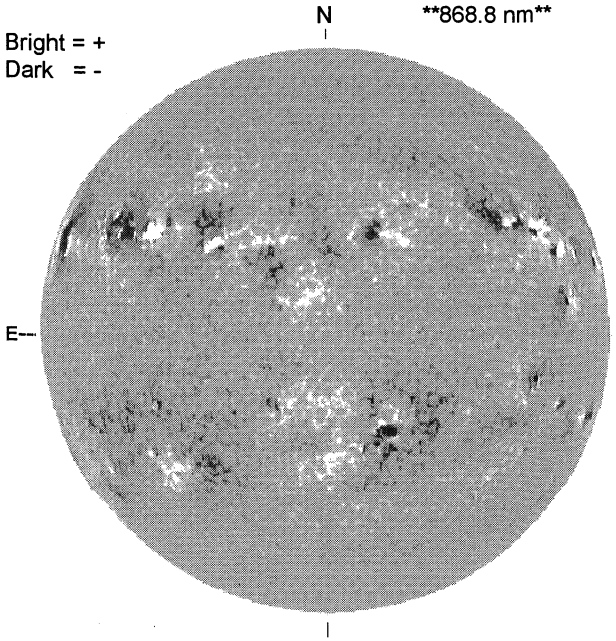

1545 UT

STANFORD MAGNETOGRAM

Solid = +
Dashed = -

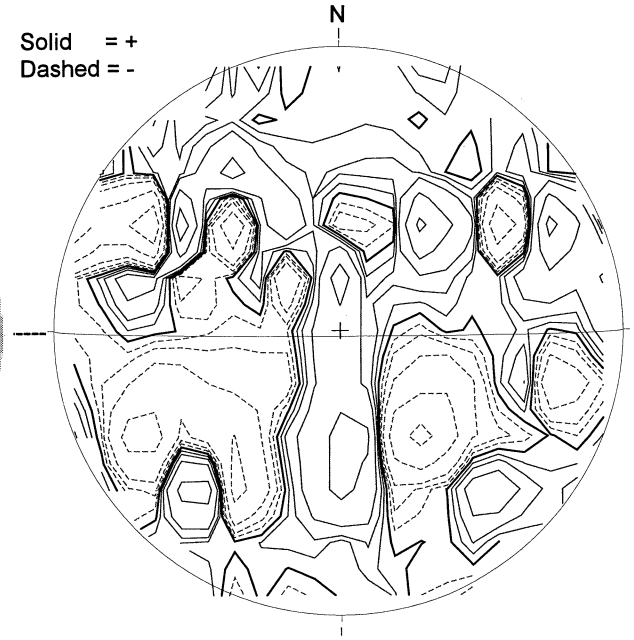

1947 UT

MT. WILSON MAGNETOGRAM

DeltaY = 13.1
DeltaX = 9.6

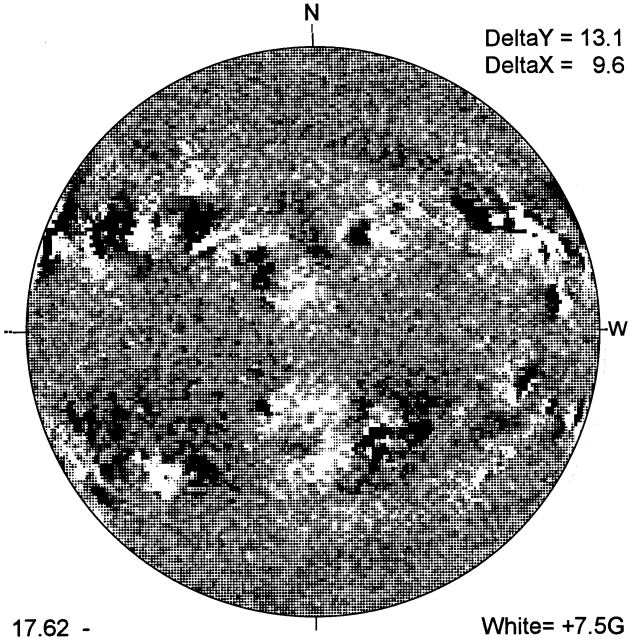

17.62 -
18.54 UT

White= +7.5G
Black = -7.5G

MEUDON H-ALPHA

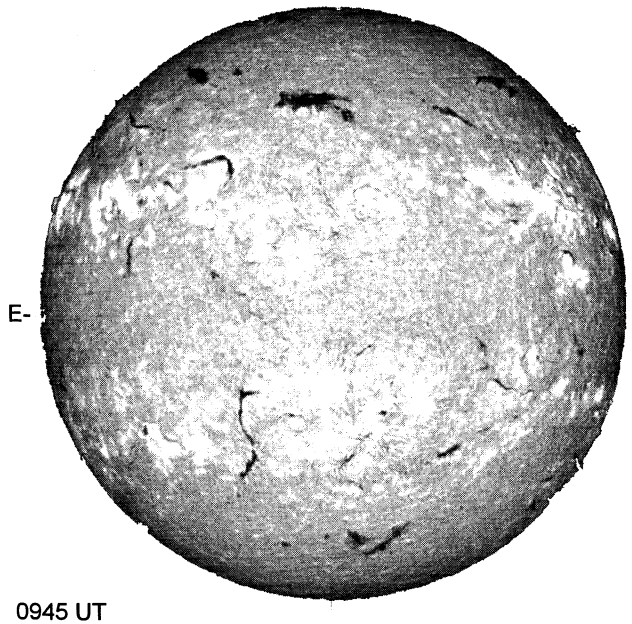

0945 UT

RAMEY SUNSPOT

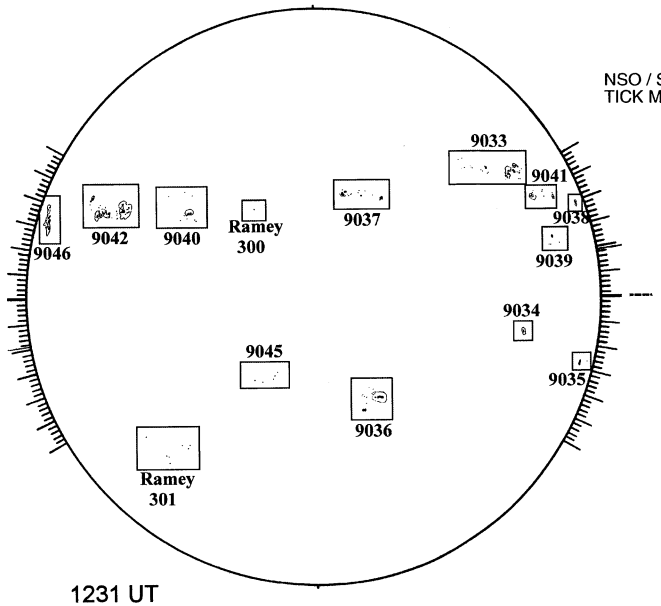

1231 UT

SACRAMENTO PEAK CORONA (1.15 Radii)----

NSO / SACRAMENTO PEAK CORONAL DATA
TICK MARKS EVERY 20 MILLIONTHS

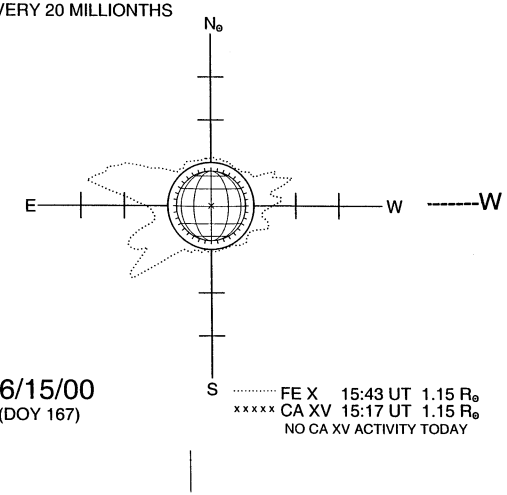

06/15/00
(DOY 167)