JUNE 11, 2000 (P= -11.37, Bo = 0.58, Lo = 30.79)

74
Jun 00

KITT PEAK MAGNETOGRAM

Bright = +
Dark = -

N

868.8 nm

E--

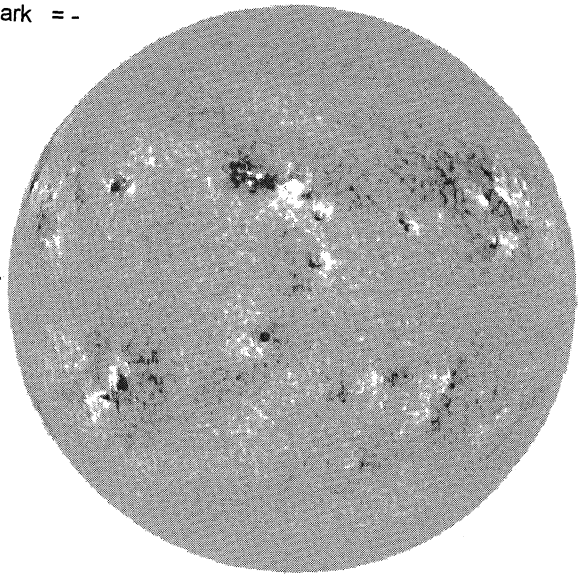

1414 UT

STANFORD MAGNETOGRAM

Solid = +
Dashed = -

N

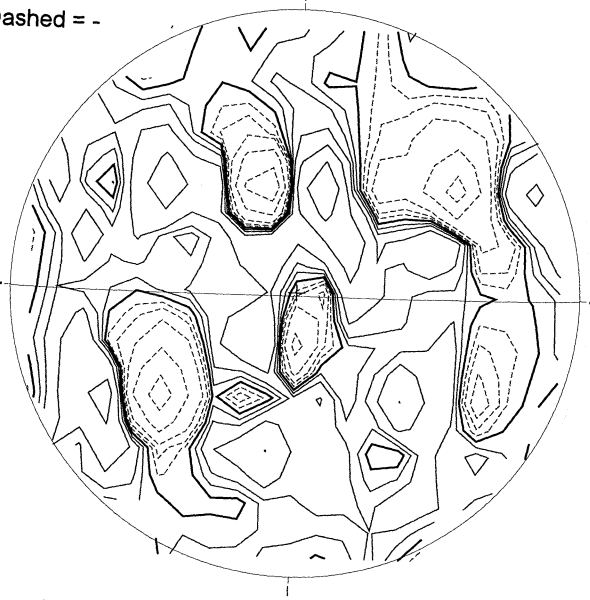

2145 UT

MT. WILSON MAGNETOGRAM

N

DeltaY = 13.1
DeltaX = 9.6

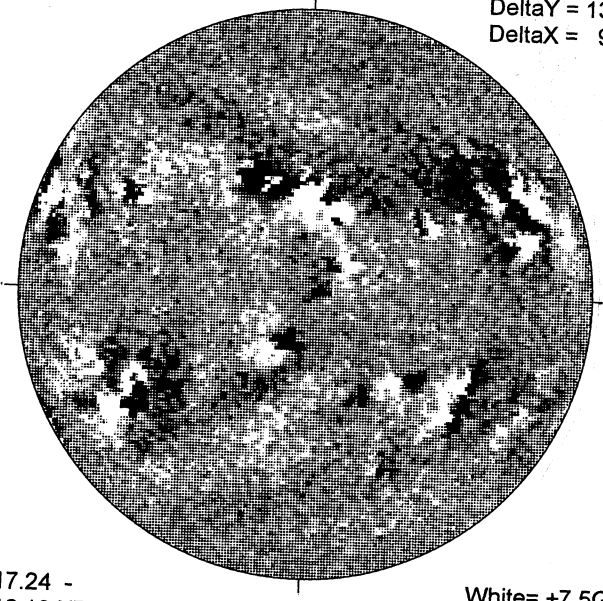

-W

17.24 -
18.16 UT

White= +7.5G
Black = -7.5G

MEUDON H-ALPHA

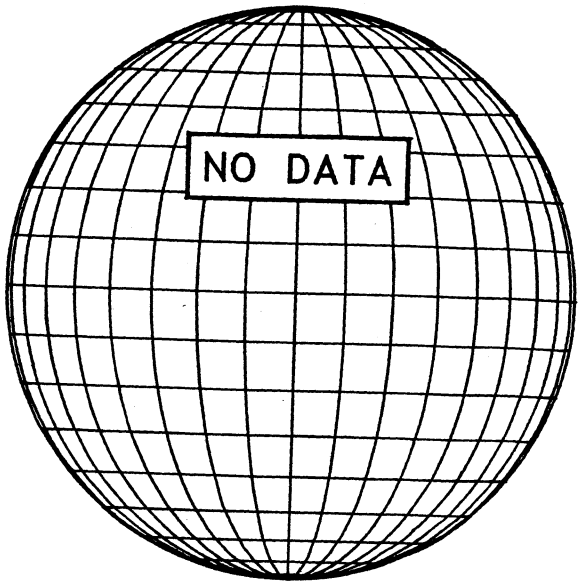

S

RAMEY SUNSPOTS

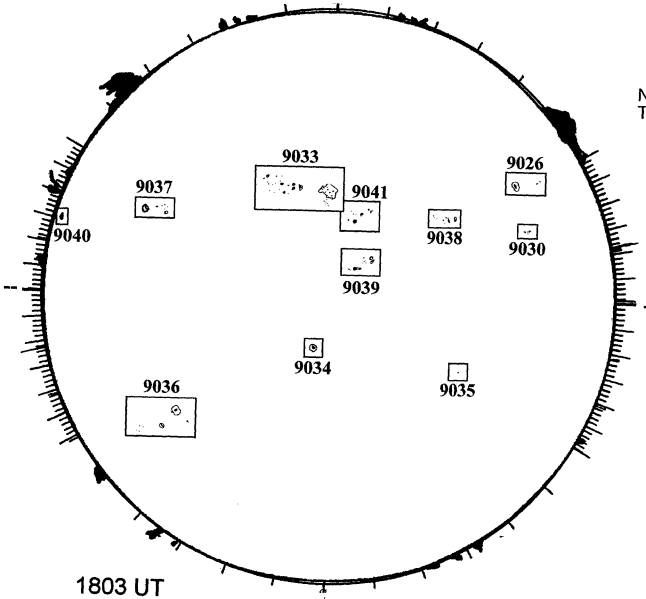

1803 UT
0459 UT LOMN Prom S

SACRAMENTO PEAK CORONA (1.15 Radii)----

NSO / SACRAMENTO PEAK CORONAL DATA
TICK MARKS EVERY 20 MILLIONTHS

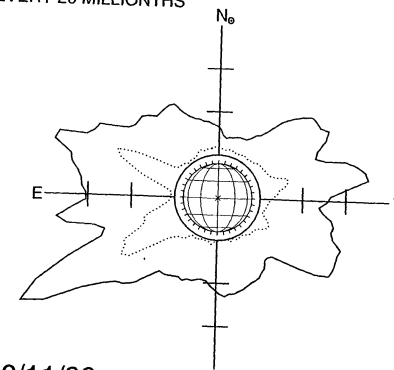

06/11/00
(DOY 163)

FE XIV 15:32 UT 1.15 R☉
FE X 16:21 UT 1.15 R☉

S