JUNE 10, 2000 (P= -11.78, Bo = 0.46 Lo = 44.03)

KITT PEAK MAGNETOGRAM

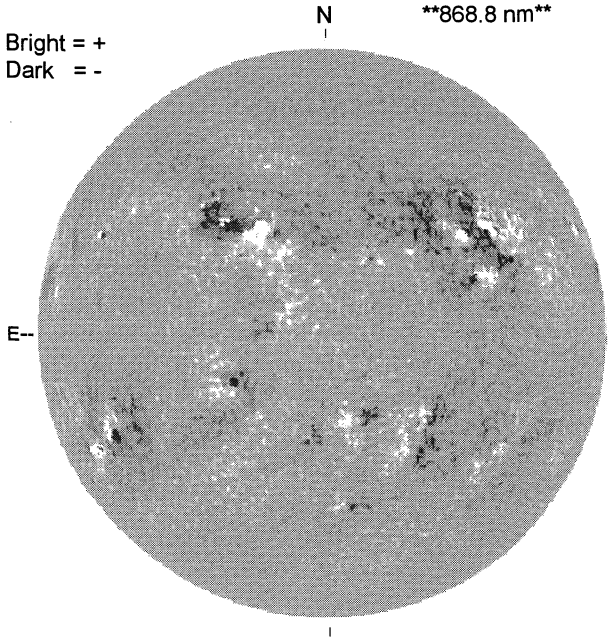

STANFORD MAGNETOGRAM

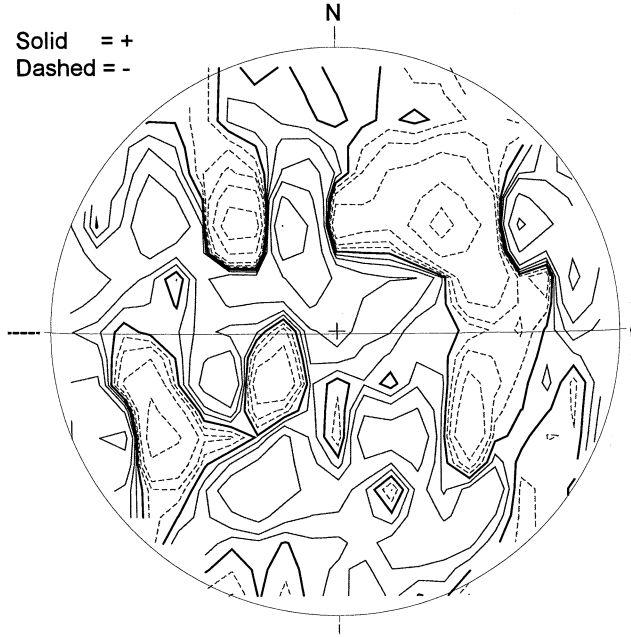

MT. WILSON MAGNETOGRAM

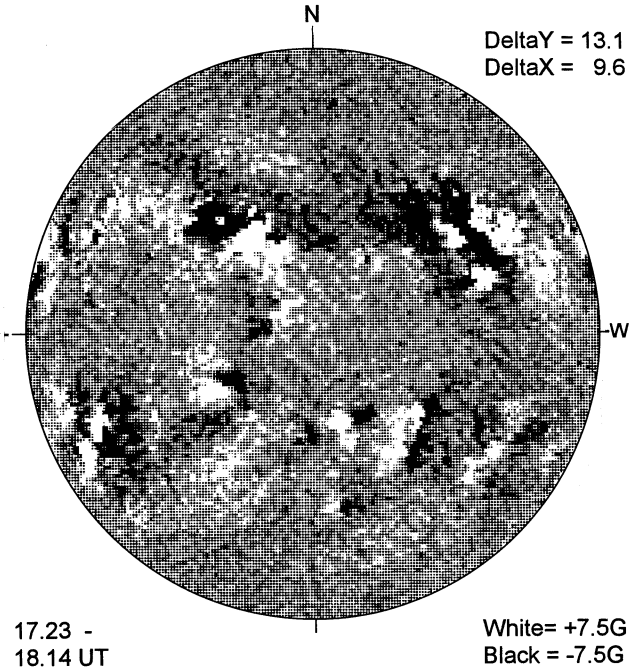

MEUDON H-ALPHA

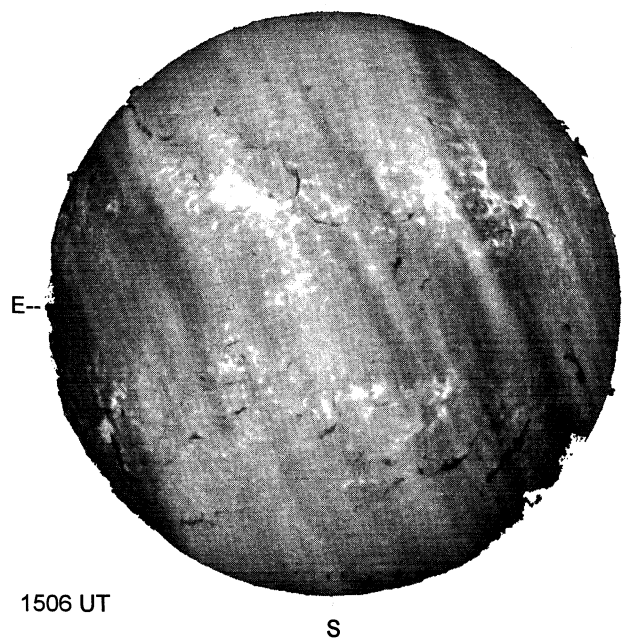

RAMEY SUNSPOTS

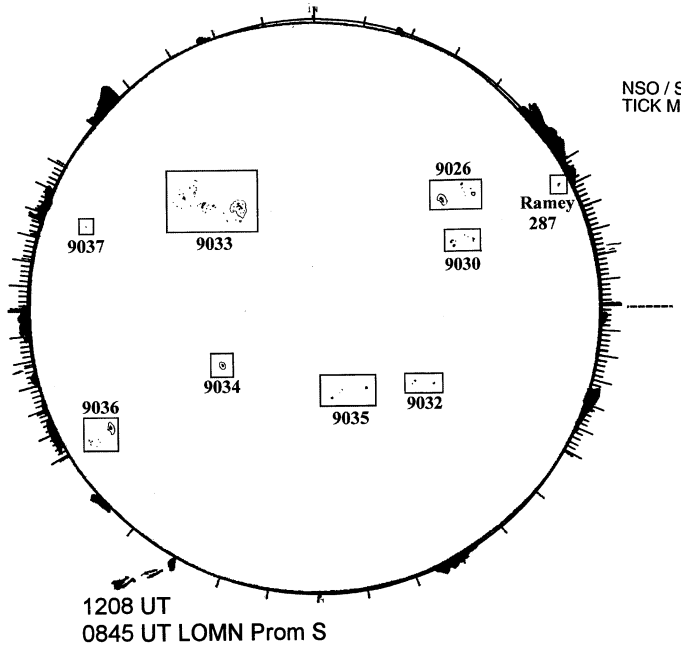

SACRAMENTO PEAK CORONA (1.15 Radii)----

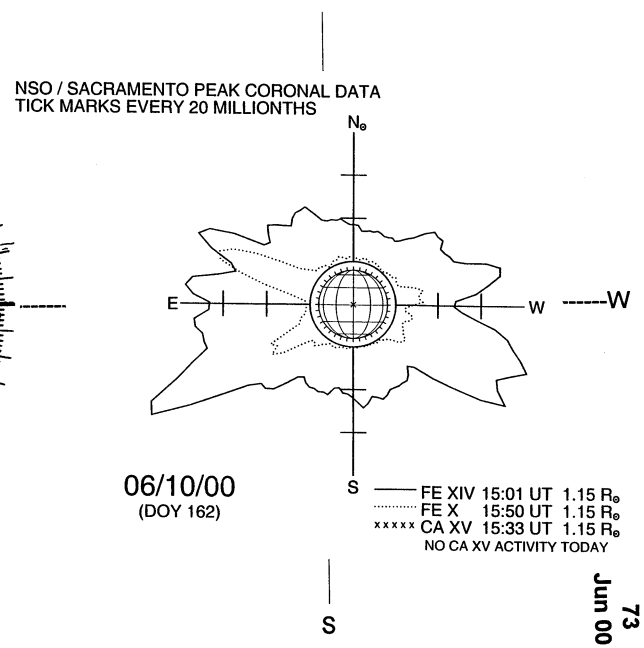

73
Jun 00