JUNE 7, 2000 (P= -13.00, Bo = 0.10, Lo = 83.74)

KITT PEAK MAGNETOGRAM

868.8 nm

Bright = +
Dark = -

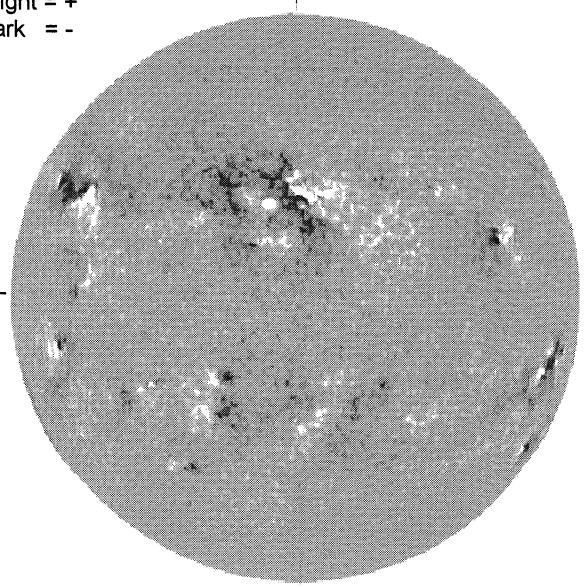

1614 UT

STANFORD MAGNETOGRAM

Solid = +
Dashed = -

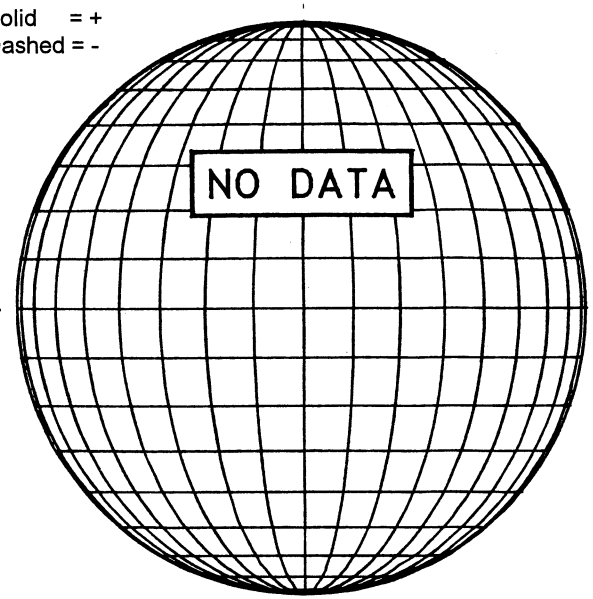

MT. WILSON MAGNETOGRAM

DeltaY = 13.1
DeltaX = 9.6

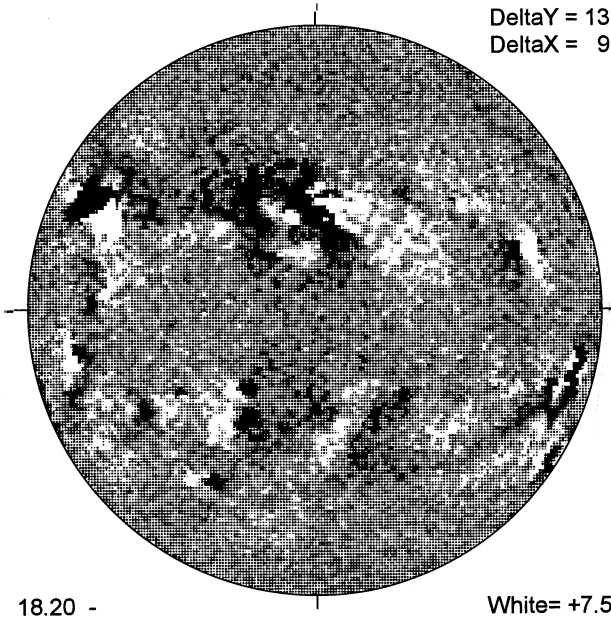

18.20 -
19.12 UT

White= +7.5G
Black = -7.5G

MEUDON H-ALPHA

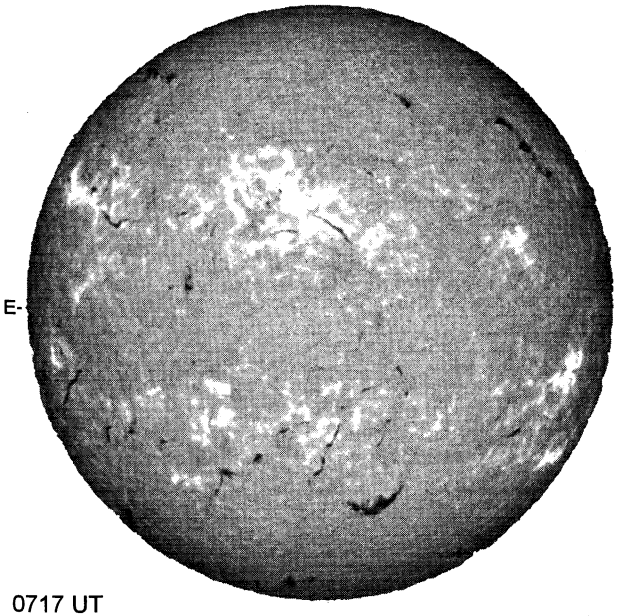

0717 UT

S

RAMEY SUNSPOTS

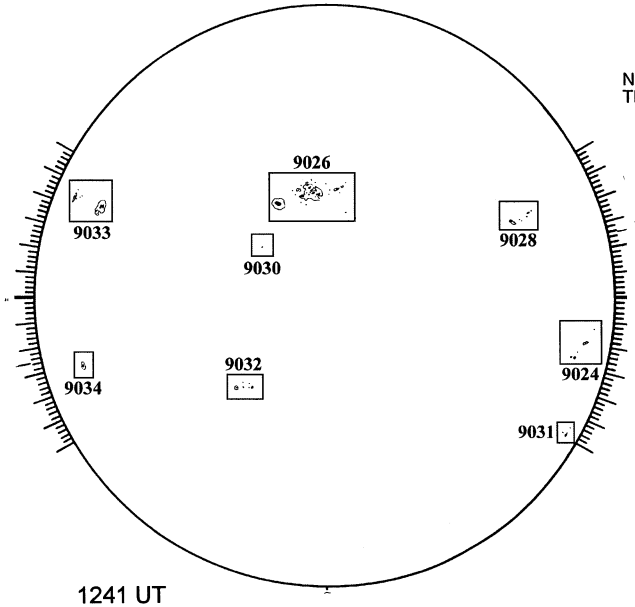

1241 UT

S

SACRAMENTO PEAK CORONA (1.15 Radii)

NSO / SACRAMENTO PEAK CORONAL DATA
TICK MARKS EVERY 20 MILLIONTHS

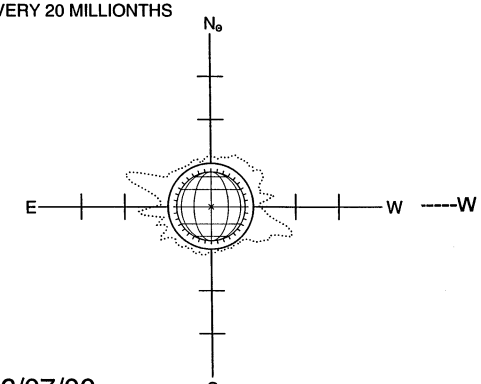

06/07/00
(DOY 159)

FE X 15:59 UT 1.15 R☉
xxxxx CA XV 15:37 UT 1.15 R☉
NO CA XV ACTIVITY TODAY

S