JUNE 4, 2000 (P= -14.19, Bo = -0.26, Lo = 123.44)

KITT PEAK MAGNETOGRAM

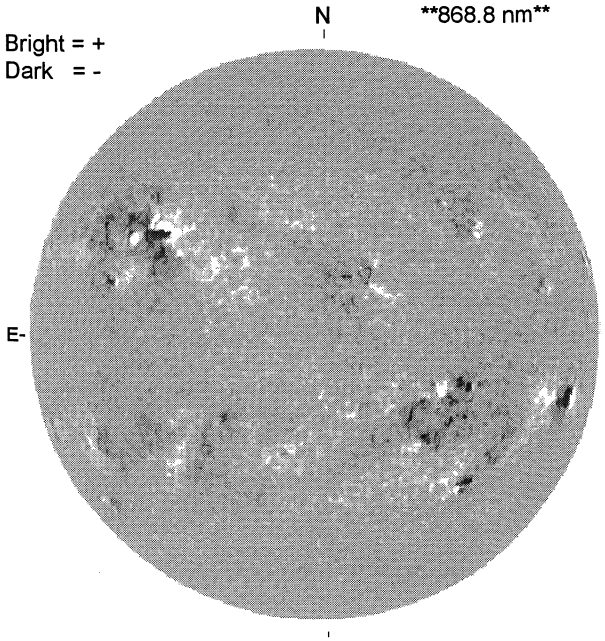

1938 UT

STANFORD MAGNETOGRAM

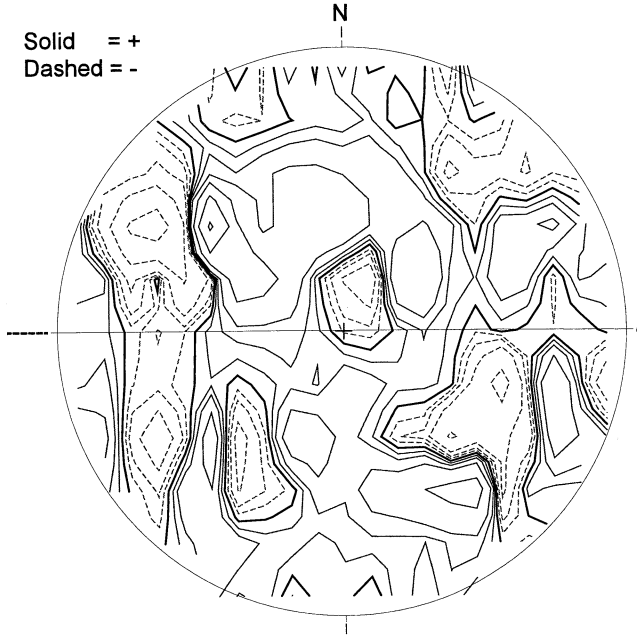

1956 UT

MT. WILSON MAGNETOGRAM

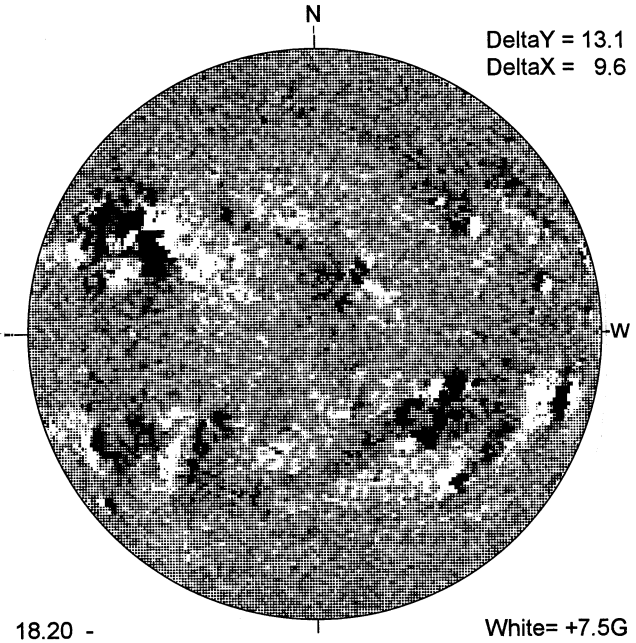

18.20 -
19.12 UT

MEUDON H-ALPHA

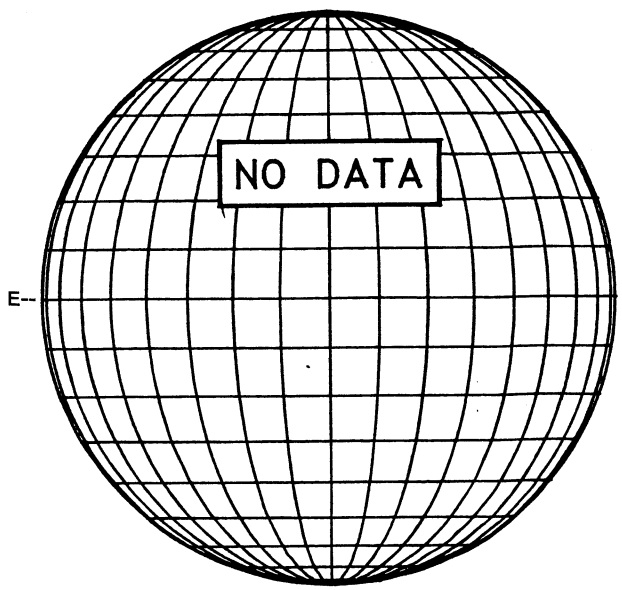

RAMEY SUNSPOT

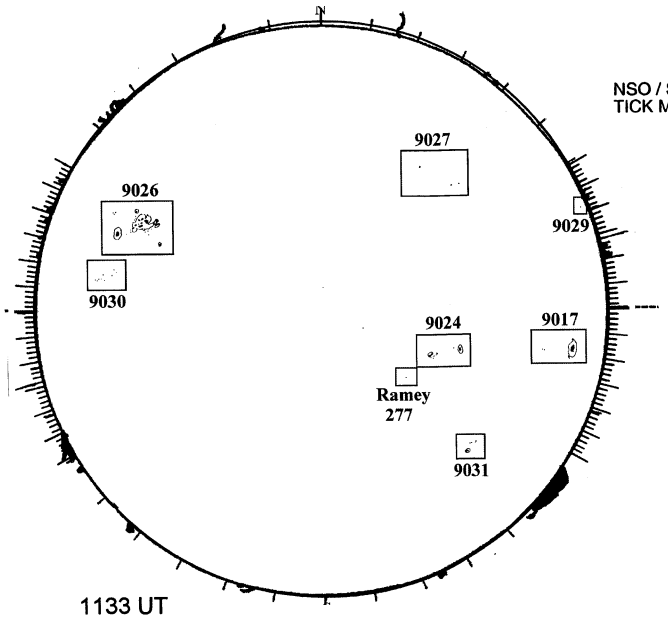

1133 UT
0357 UT LOMN Prom

SACRAMENTO PEAK CORONA (1.15 Radii)----

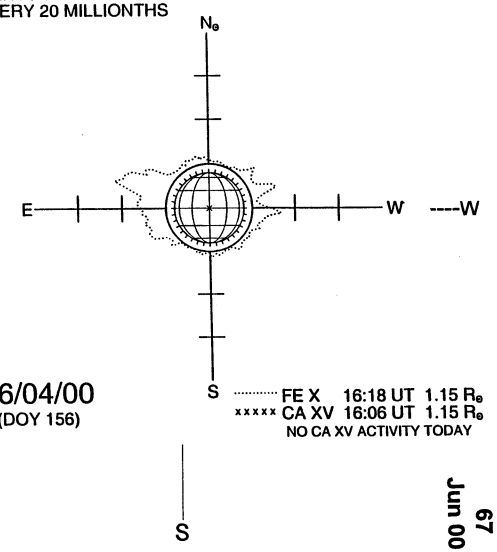

06/04/00
(DOY 156)

67
Jun 00