MAY 30, 2000 (P= -16.07, Bo = -0.86, Lo = 189.61)

KITT PEAK MAGNETOGRAM

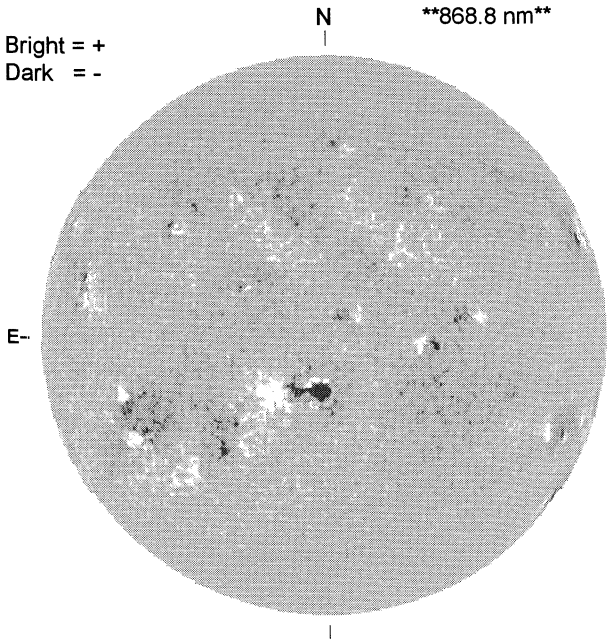

STANFORD MAGNETOGRAM

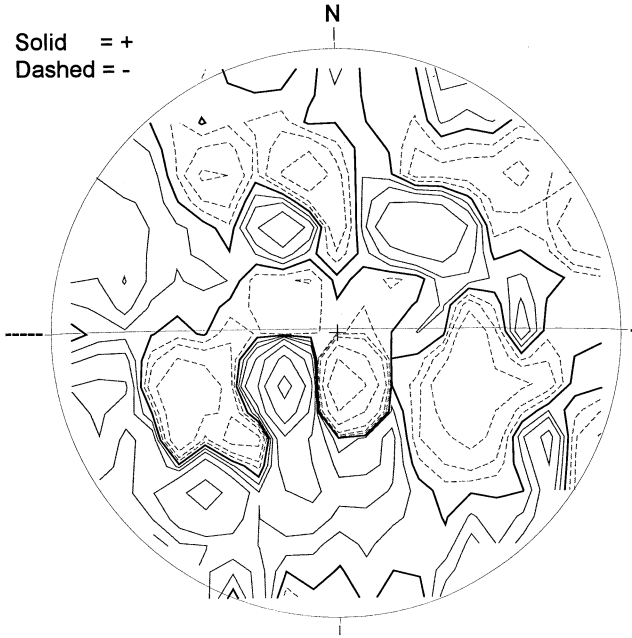

MT. WILSON MAGNETOGRAM

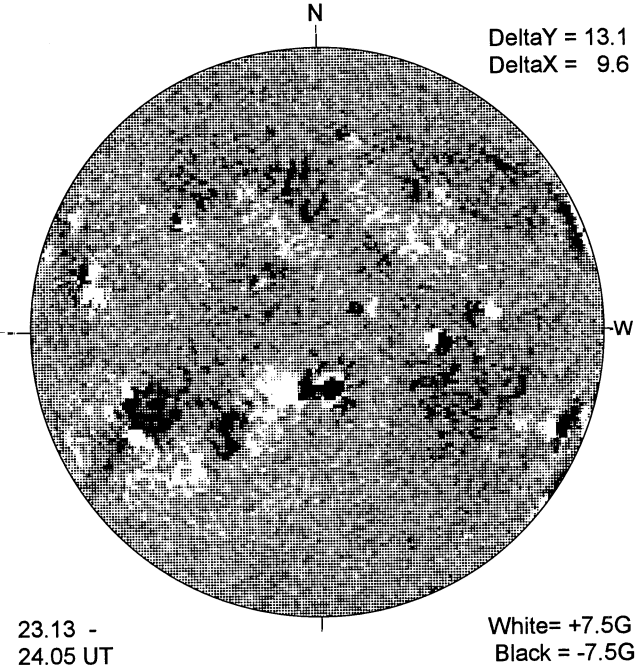

MEUDON H-ALPHA

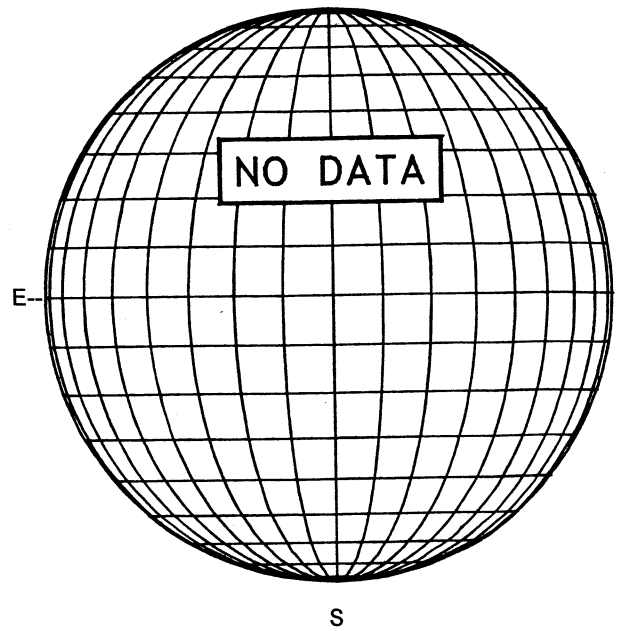

RAMEY SUNSPOT

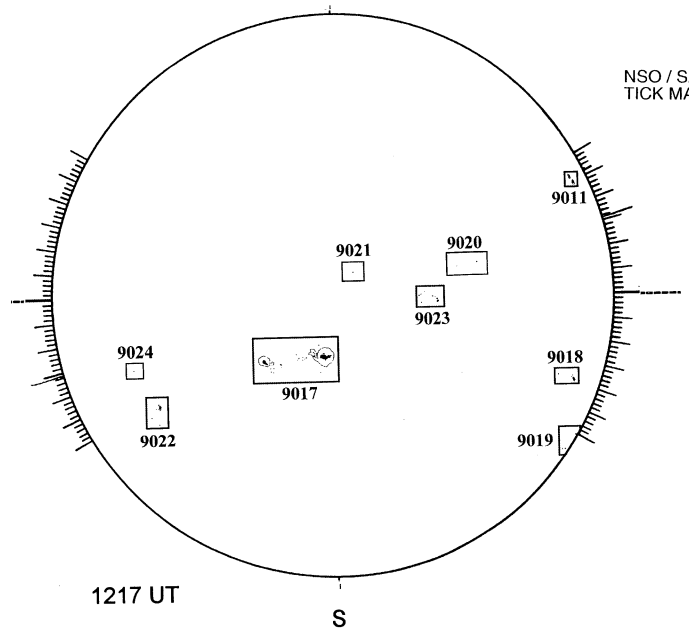
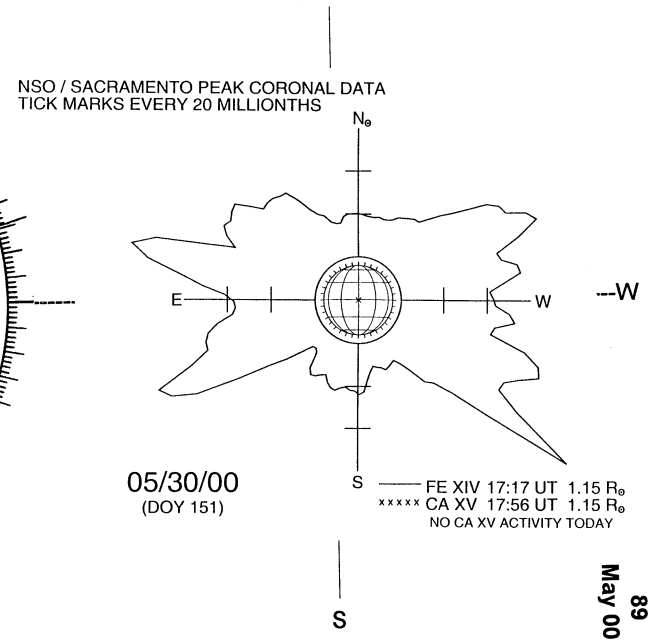
SACRAMENTO PEAK CORONA (1.15 Radii)----