MAY 27, 2000 (P= -17.14, Bo = -1.22, Lo = 229.30)

KITT PEAK MAGNETOGRAM

868.8 nm

Bright = +
Dark = -

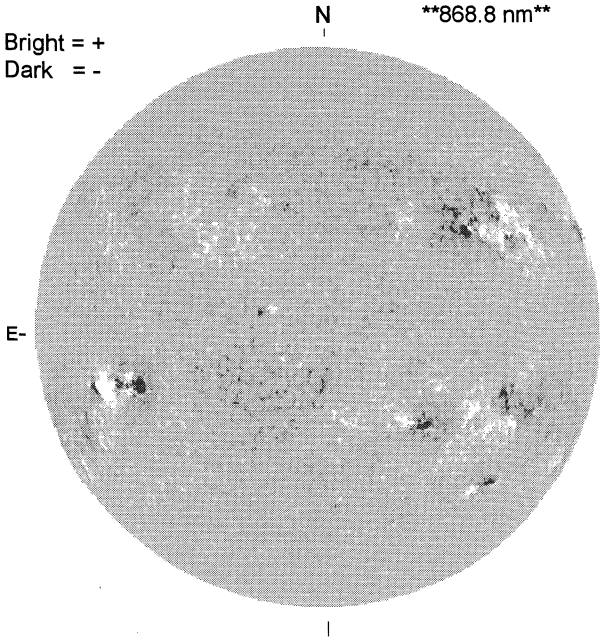

1409 UT

STANFORD MAGNETOGRAM

Solid = +
Dashed = -

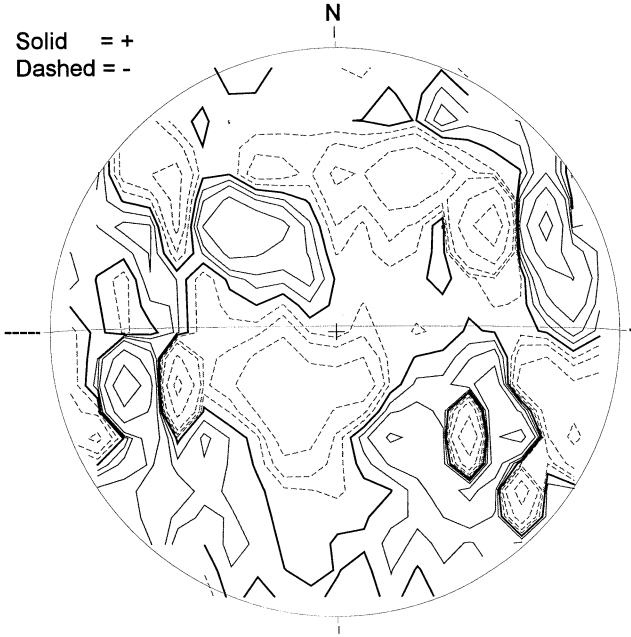

2100 UT

MT. WILSON MAGNETOGRAM

DeltaY = 13.1
DeltaX = 9.6

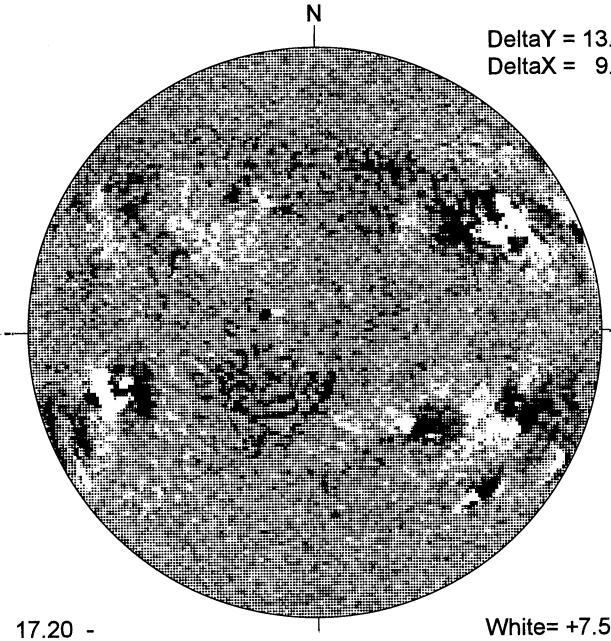

17.20 -
18.12 UT

White= +7.5G
Black = -7.5G

MEUDON H-ALPHA

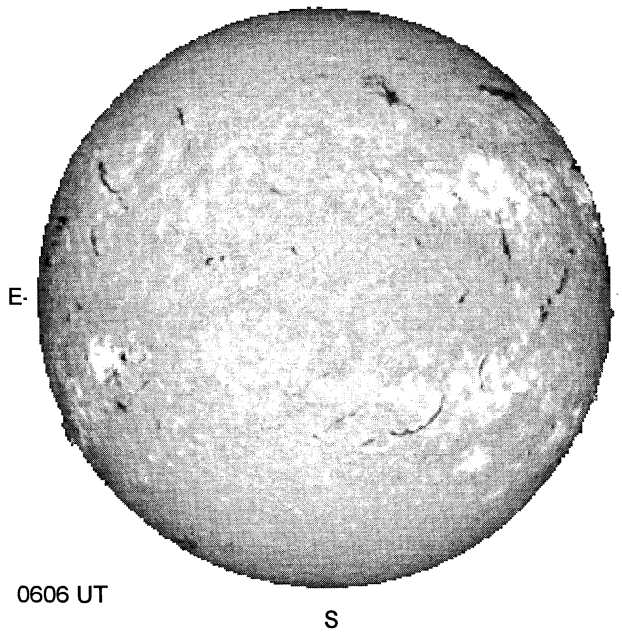

0606 UT

RAMEY SUNSPOT

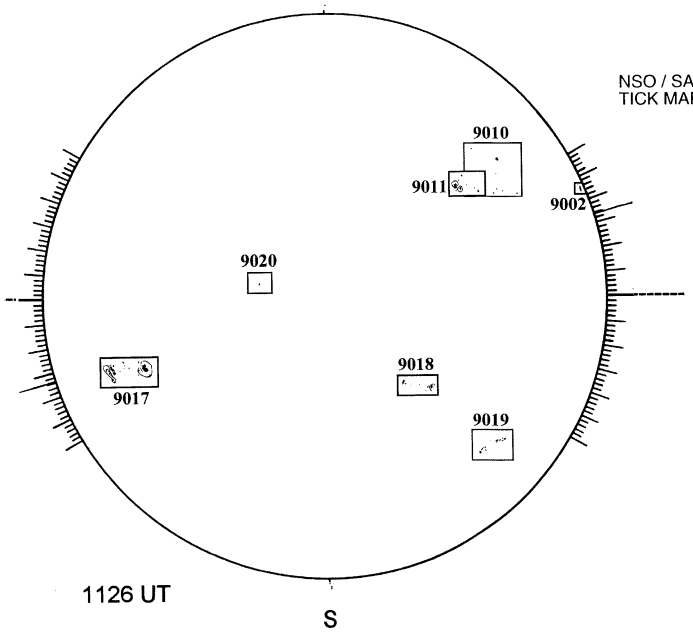

1126 UT

SACRAMENTO PEAK CORONA (1.15 Radii)

NSO / SACRAMENTO PEAK CORONAL DATA
TICK MARKS EVERY 20 MILLIONTHS

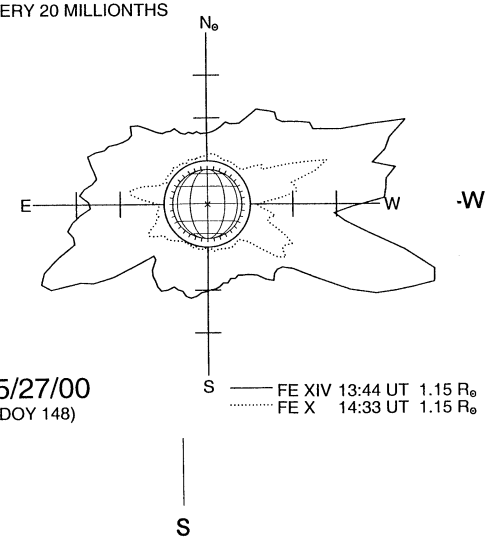

05/27/00
(DOY 148)

FE XIV 13:44 UT 1.15 R☉
FE X 14:33 UT 1.15 R☉