MAY 11, 2000 (P= -21.95, Bo = -3.08, Lo = 80.95)

KITT PEAK MAGNETOGRAM

868.8 nm

Bright = +
Dark = -

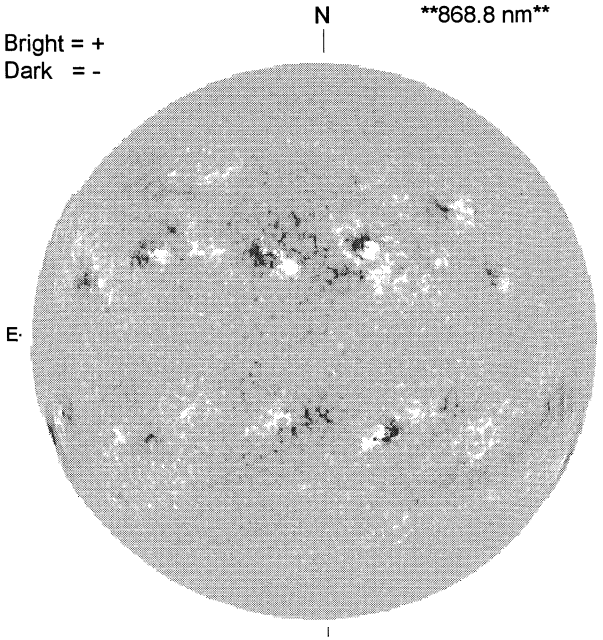

1554 UT

STANFORD MAGNETOGRAM

Solid = +
Dashed = -

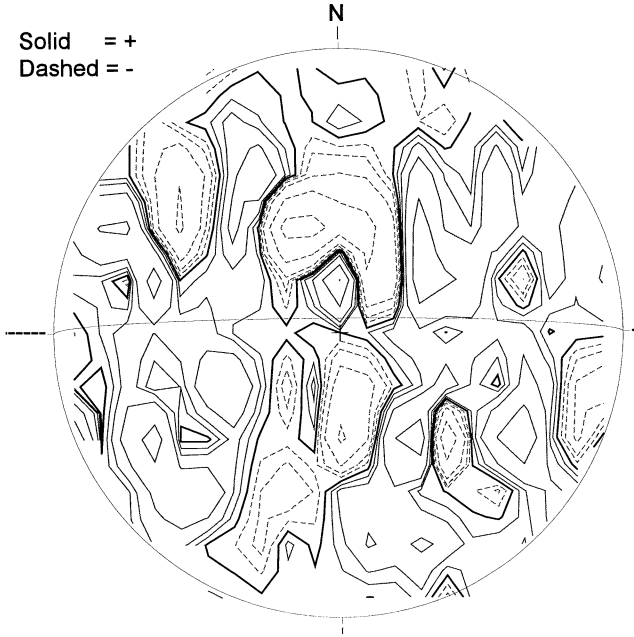

2149 UT

MT. WILSON MAGNETOGRAM

DeltaY = 13.1
DeltaX = 9.6

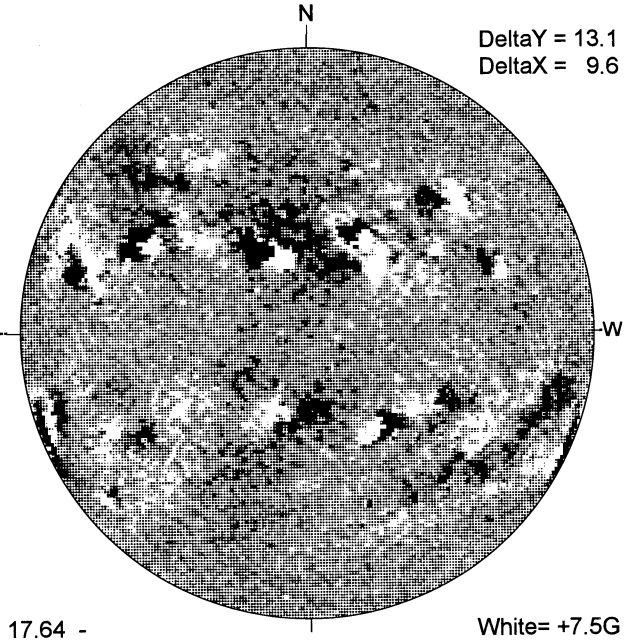

17.64 -
18.57 UT

White= +7.5G
Black = -7.5G

MEUDON H-ALPHA

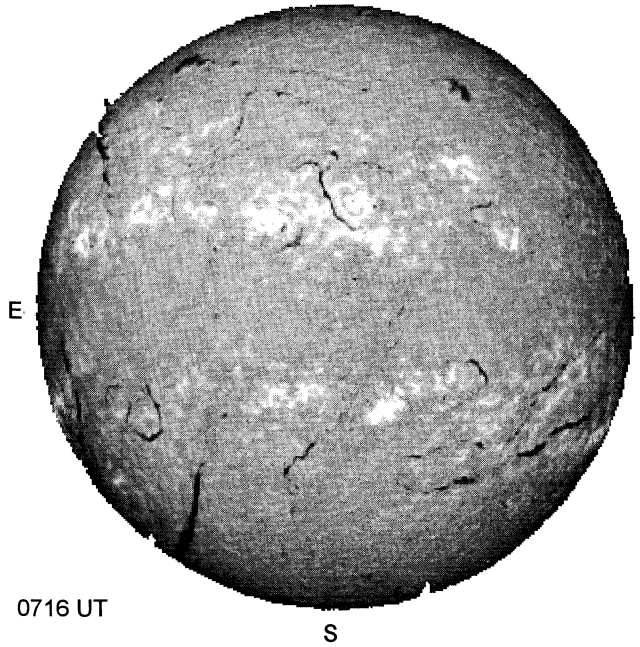

0716 UT

RAMEY SUNSPOTS

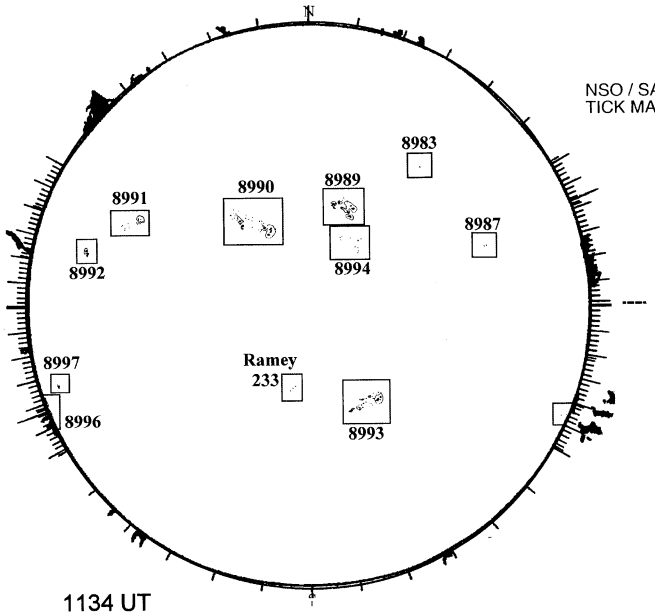

1134 UT
0510 UT LOMN Prom

SACRAMENTO PEAK CORONA (1.15 Radii)

NSO / SACRAMENTO PEAK CORONAL DATA
TICK MARKS EVERY 20 MILLIONTHS

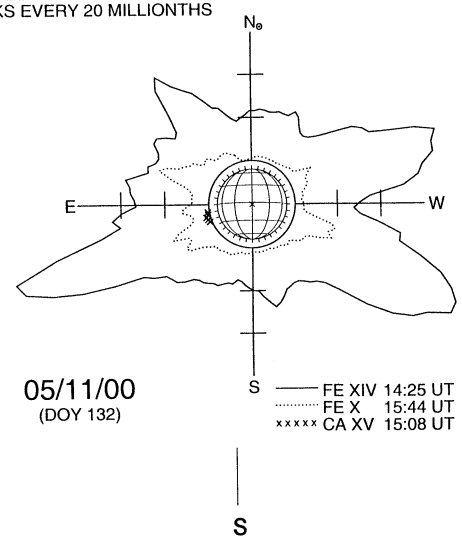

05/11/00
(DOY 132)

S