MAY 5, 2000 (P= -23.32, Bo = -3.72, Lo = 160.28)

KITT PEAK MAGNETOGRAM

Bright = +
Dark = -

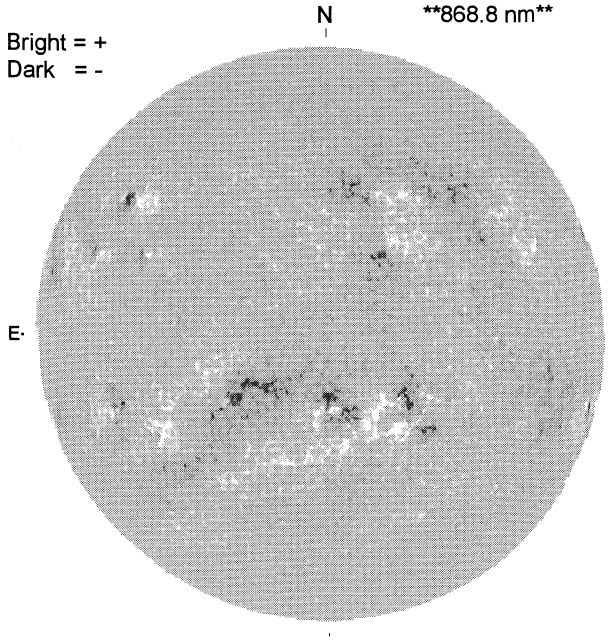

1714 UT

STANFORD MAGNETOGRAM

Solid = +
Dashed = -

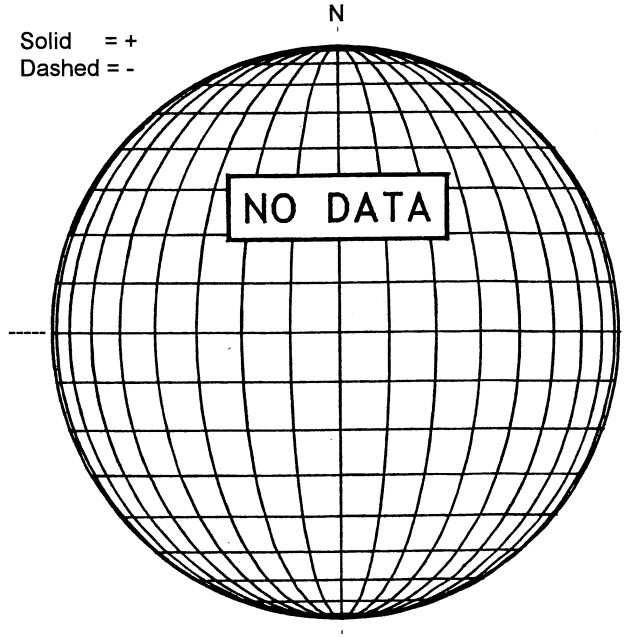

MT. WILSON MAGNETOGRAM

DeltaY = 13.1
DeltaX = 9.6

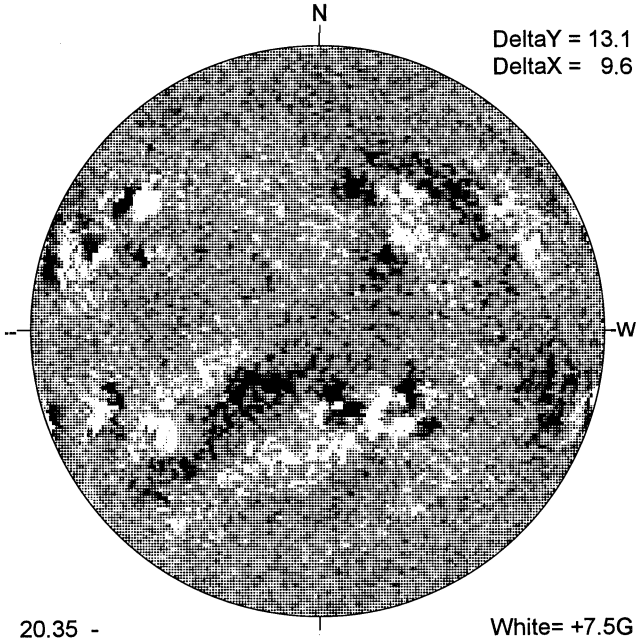

20.35 -
21.28 UT

White= +7.5G
Black = -7.5G

MEUDON H-ALPHA

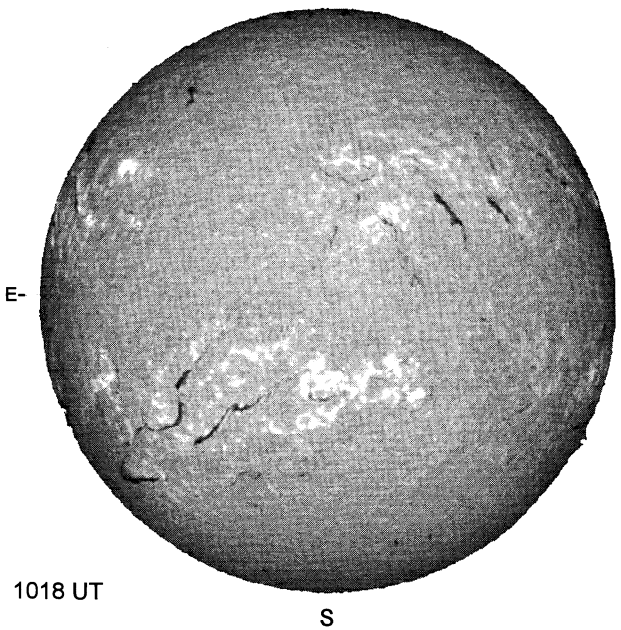

1018 UT

RAMEY SUNSPOT

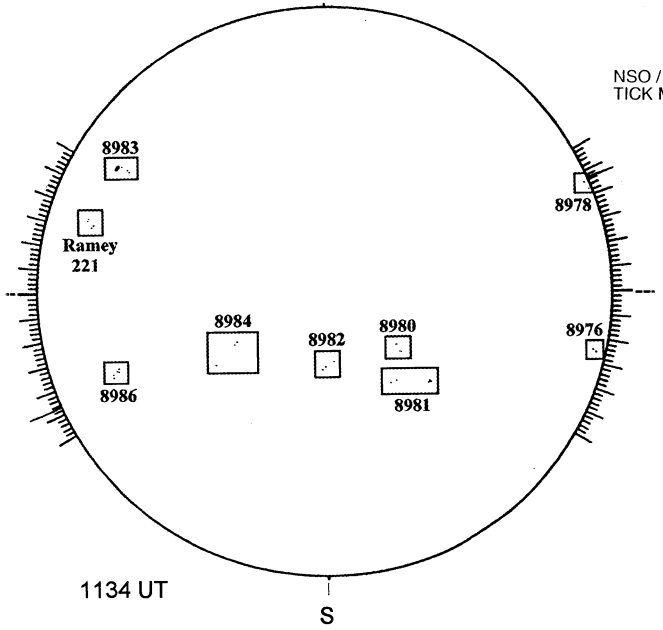

1134 UT

SACRAMENTO PEAK CORONA (1.15 Radii)

NSO / SACRAMENTO PEAK CORONAL DATA
TICK MARKS EVERY 20 MILLIONTHS

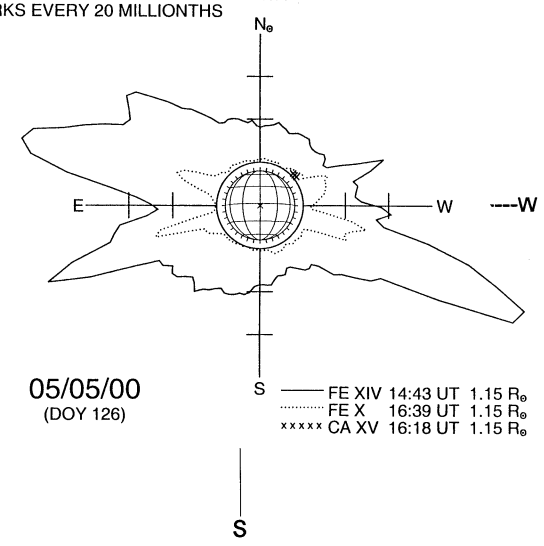

05/05/00
(DOY 126)