# APRIL 23, 2000 ( P= -25.30, Bo = -4.90, Lo = 318.86)

## KITT PEAK MAGNETOGRAM

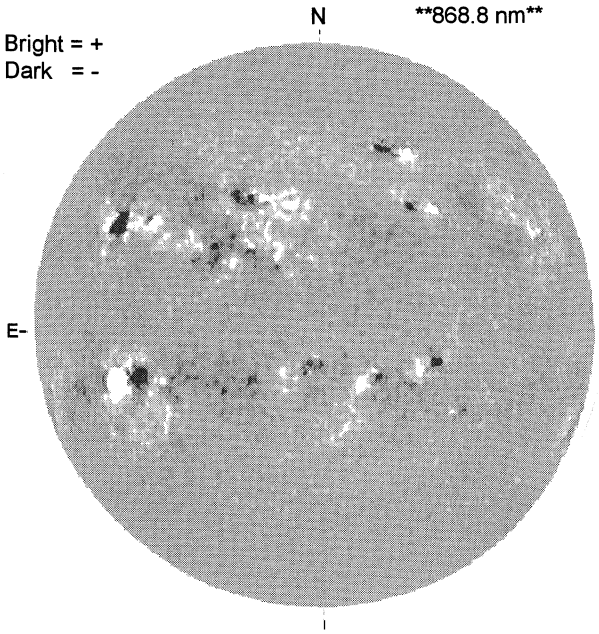


## STANFORD MAGNETOGRAM

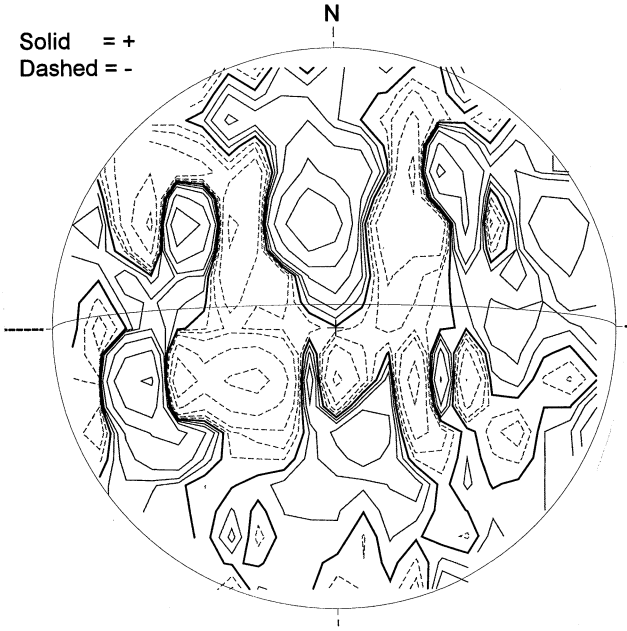


## MT. WILSON MAGNETOGRAM

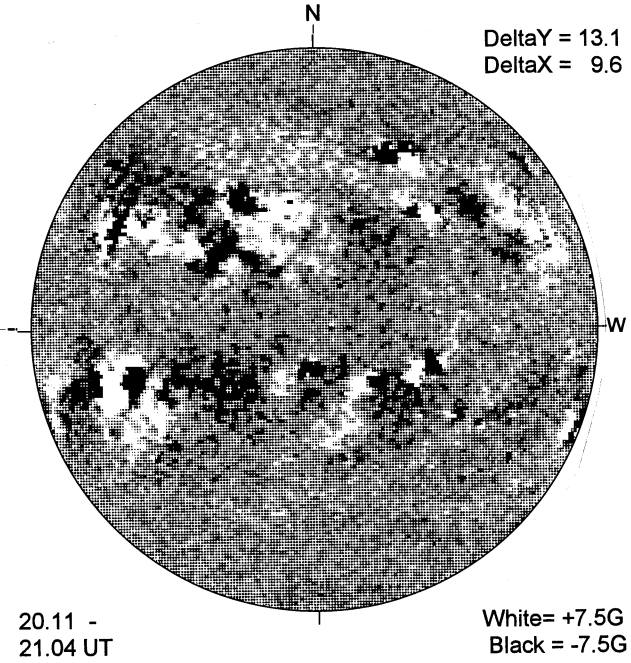


## MEUDON H-ALPHA

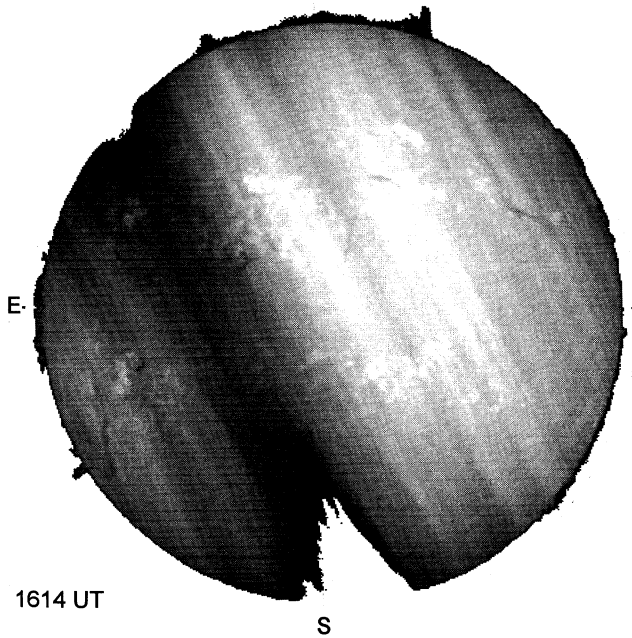


## RAMEY SUNSPOT

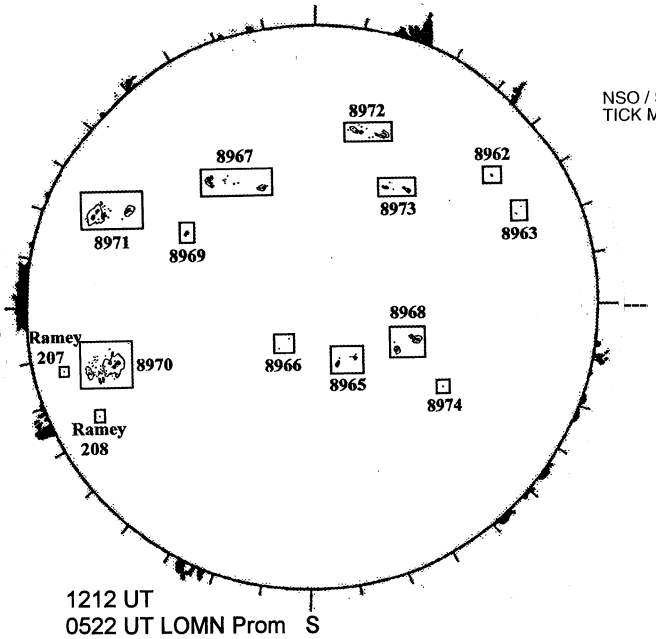

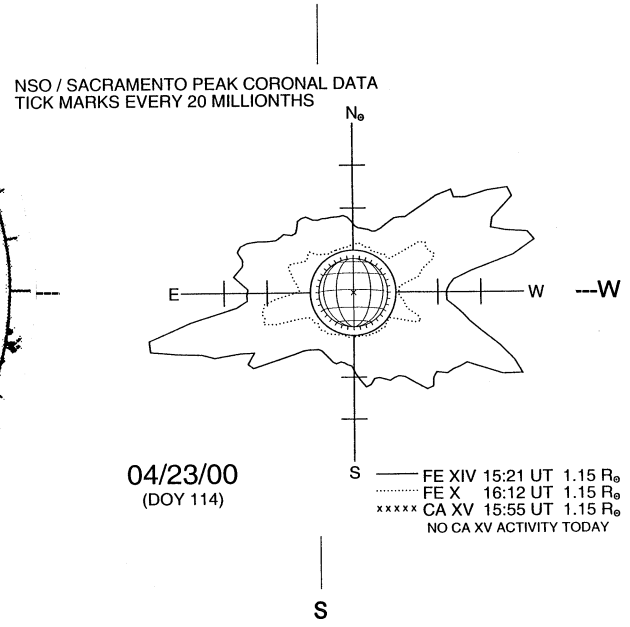
## SACRAMENTO PEAK CORONA (1.15 Radii)