APRIL 21, 2000 (P= -25.53, Bo = -5.08, Lo = 345.28)

KITT PEAK MAGNETOGRAM

Bright = +
Dark = -

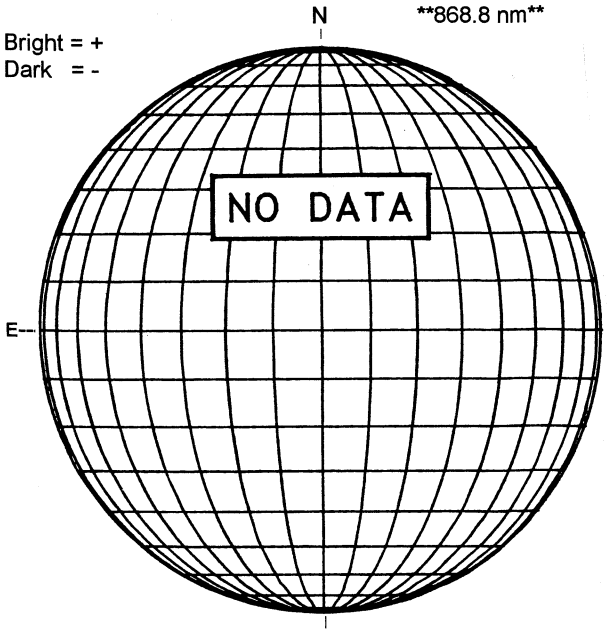

STANFORD MAGNETOGRAM

Solid = +
Dashed = -

2244 UT

MT. WILSON MAGNETOGRAM

DeltaY = 13.0
DeltaX = 9.6

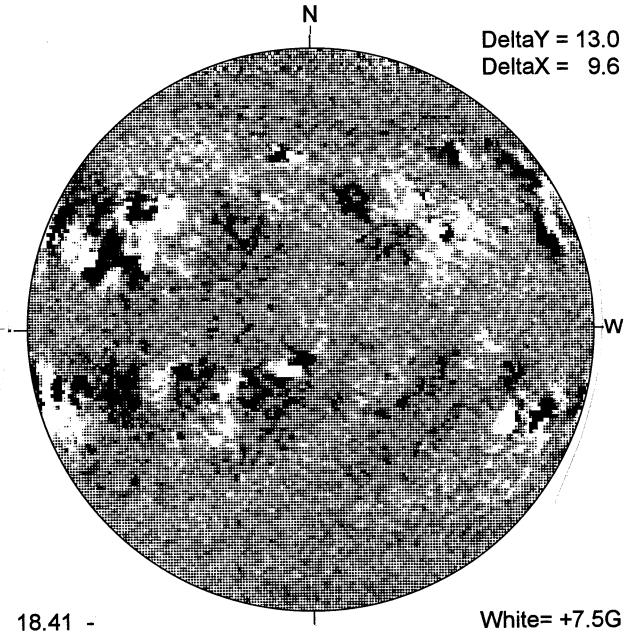

18.41 -
19.35 UT

White= +7.5G
Black = -7.5G

MEUDON H-ALPHA

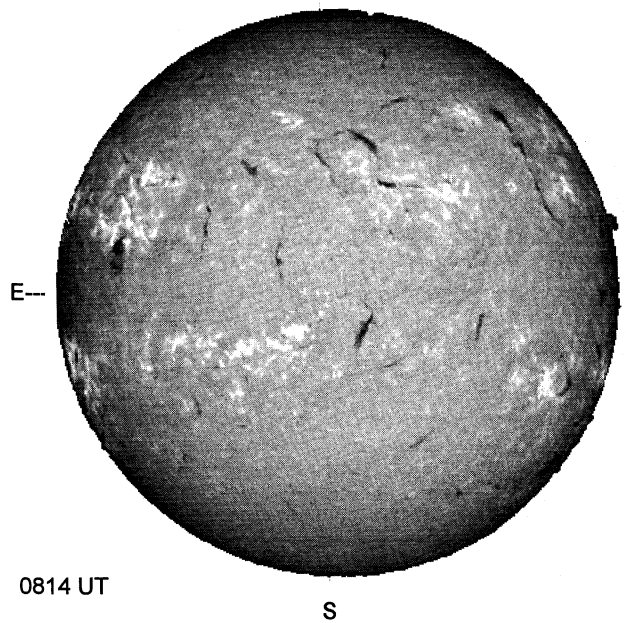

0814 UT

RAMEY SUNSPOT

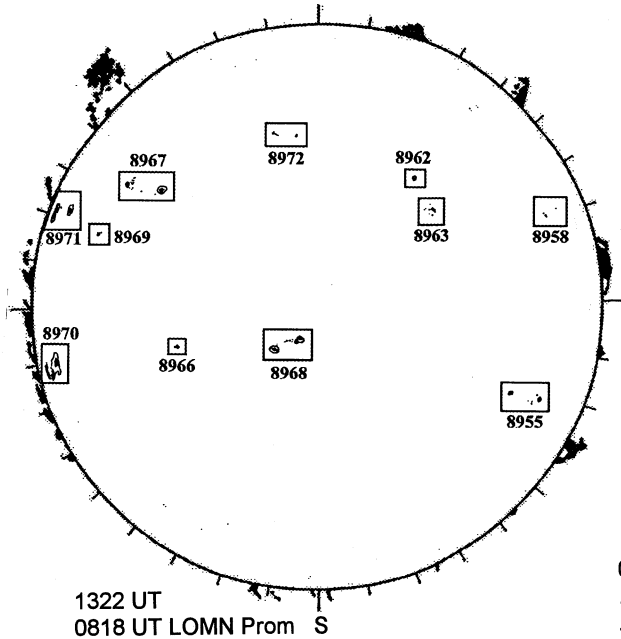

1322 UT
0818 UT LOMN Prom

LOMNICKY PEAK CORONA (1.04 Radii)

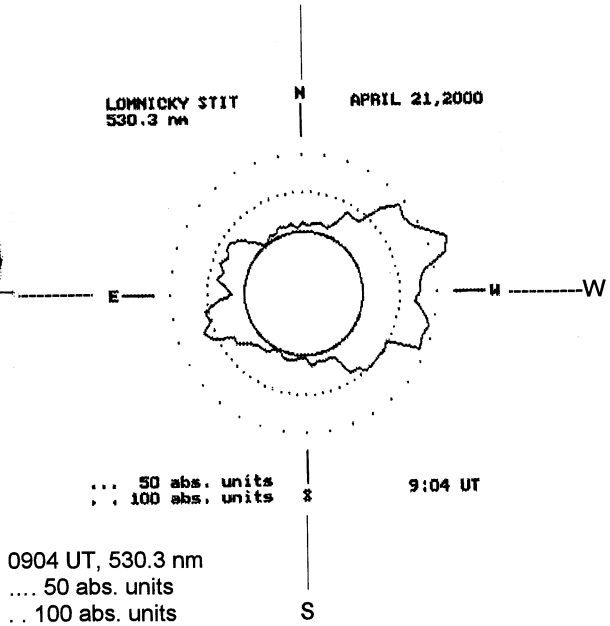

0904 UT, 530.3 nm
.... 50 abs. units
. . 100 abs. units