APRIL 19, 2000 (P= -25.72, Bo = -5.26, Lo = 11.69)

KITT PEAK MAGNETOGRAM

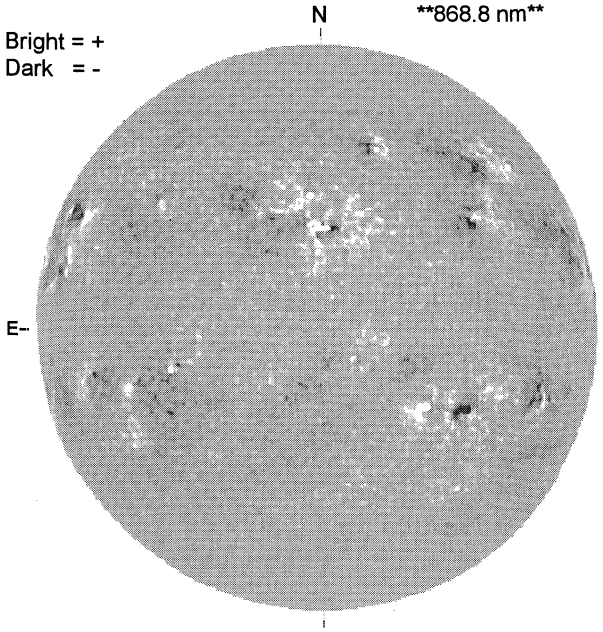

STANFORD MAGNETOGRAM

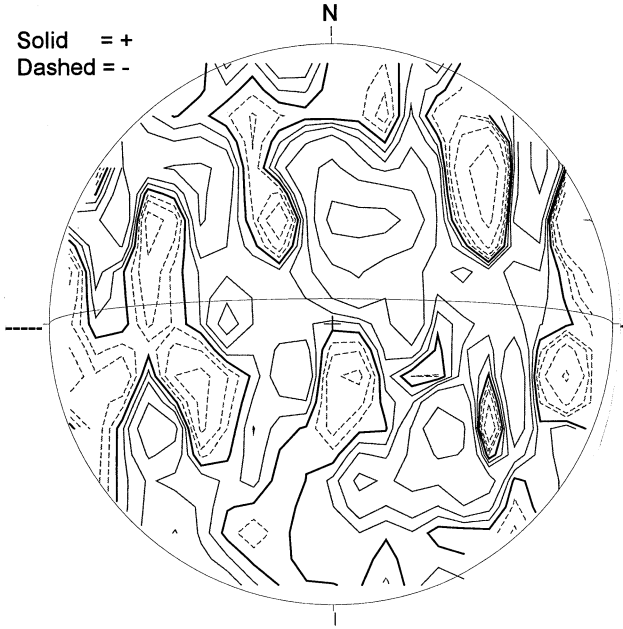

MT. WILSON MAGNETOGRAM

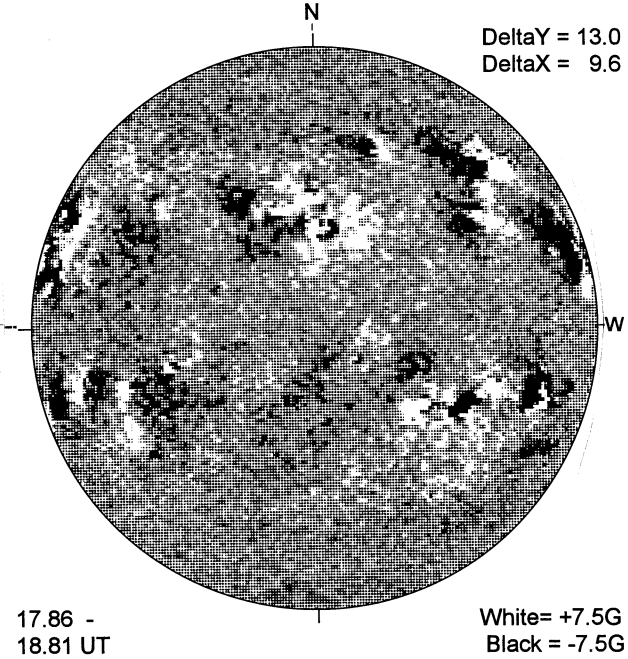

MEUDON H-ALPHA

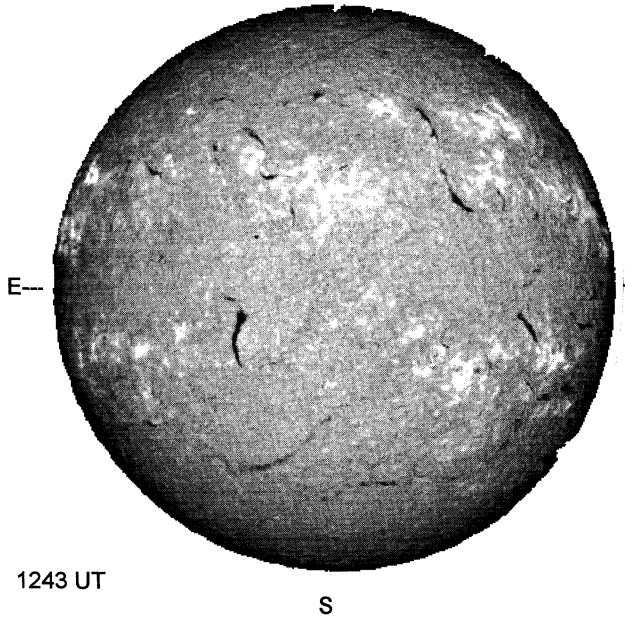

RAMEY SUNSPOT

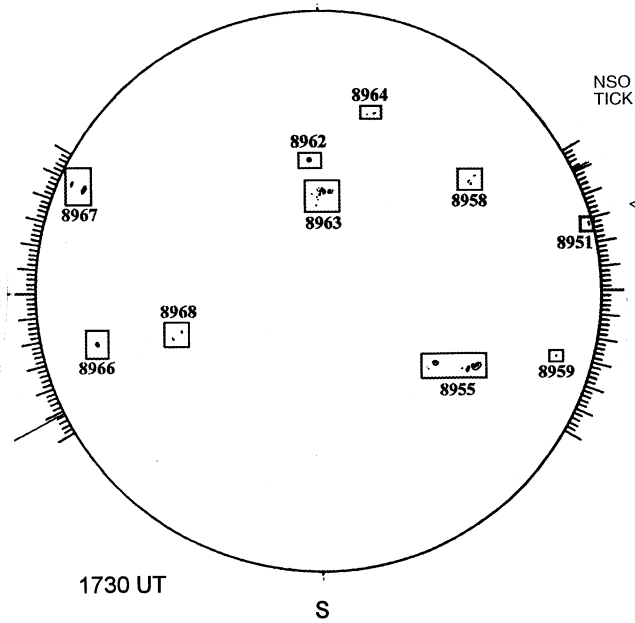
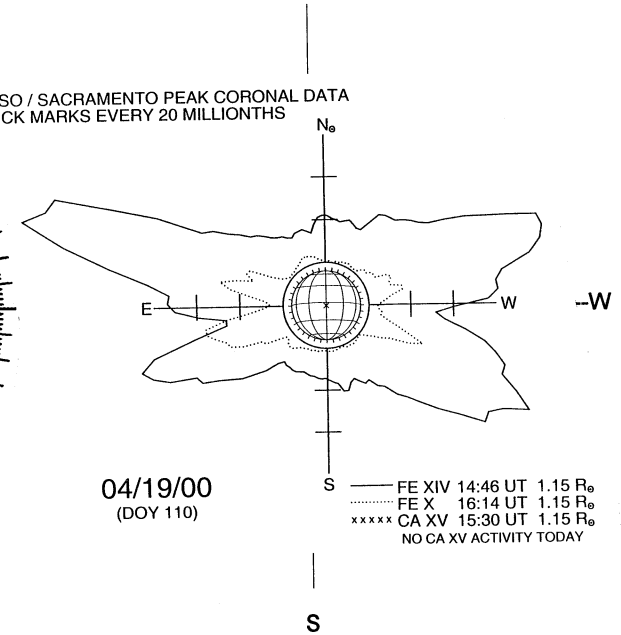
SACRAMENTO PEAK CORONA (1.15 Radii)----