MARCH 11, 2000 (P= -23.80, Bo = -7.22, Lo = 166.18)

KITT PEAK MAGNETOGRAM

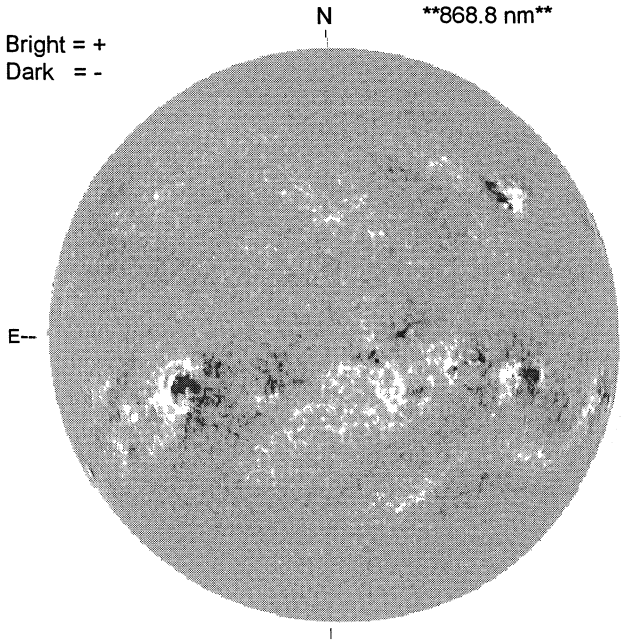

STANFORD MAGNETOGRAM

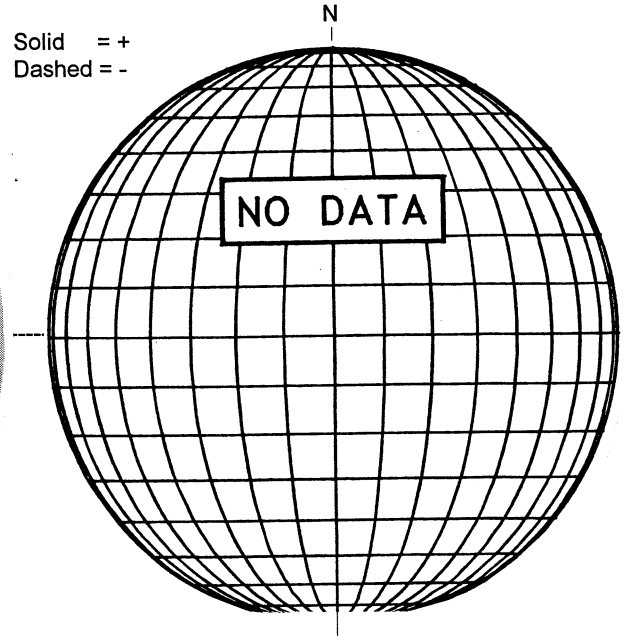

MT. WILSON MAGNETOGRAM

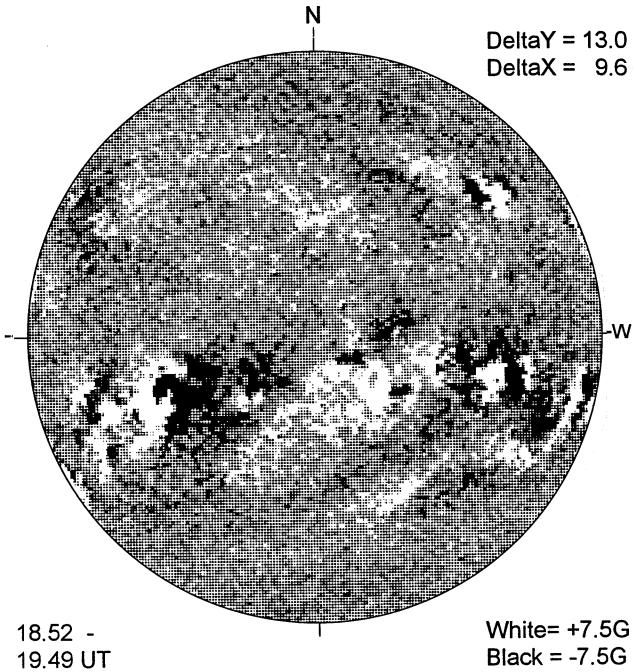

MEUDON H-ALPHA

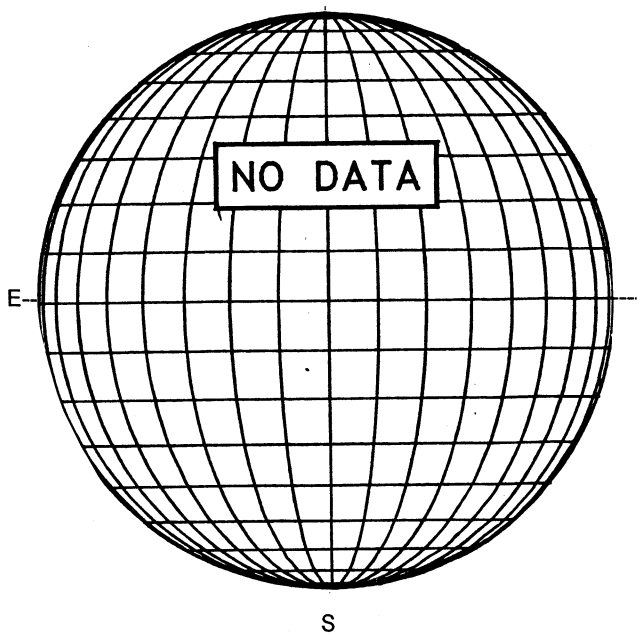

RAMEY SUNSPOTS

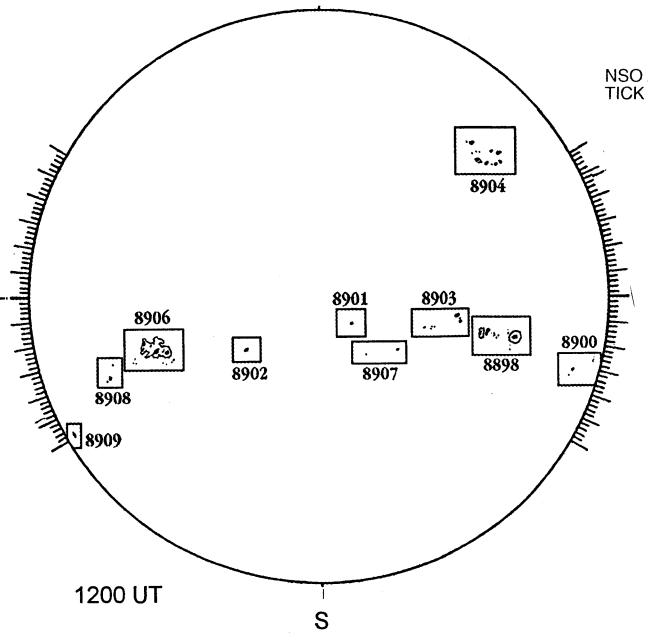
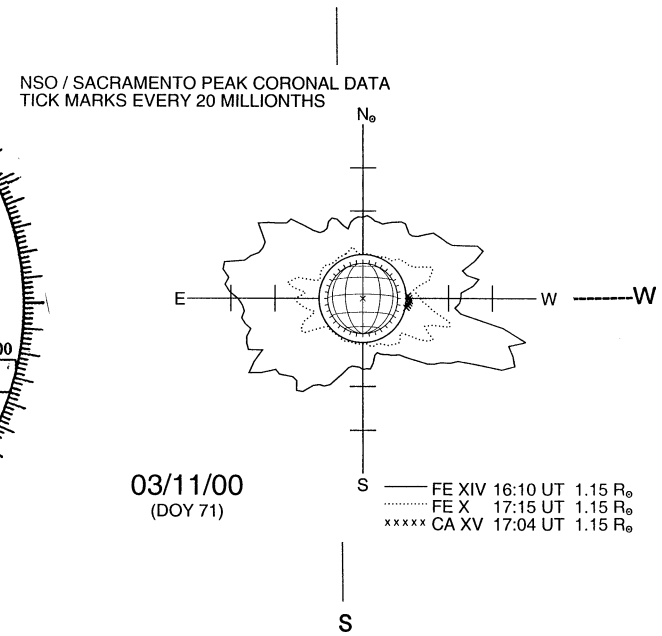
SACRAMENTO PEAK CORONA (1.15 Radii)----