MARCH 1, 2000 (P= -21.61, Bo = -7.22, Lo = 297.93)

KITT PEAK MAGNETOGRAM

Bright = +
Dark = -

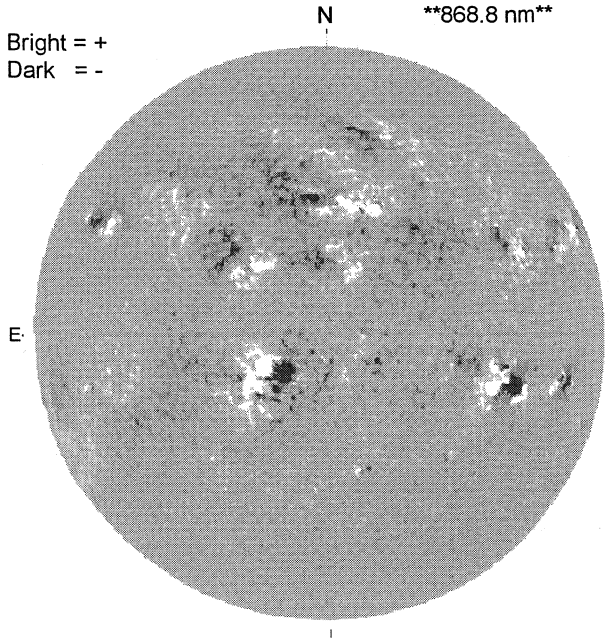

1807 UT

STANFORD MAGNETOGRAM

Solid = +
Dashed = -

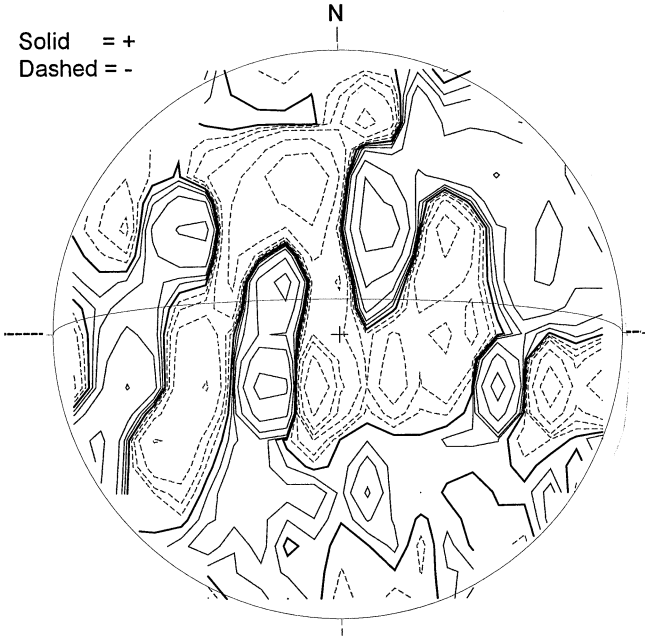

1902 UT

MT. WILSON MAGNETOGRAM

DeltaY = 13.0
DeltaX = 9.6

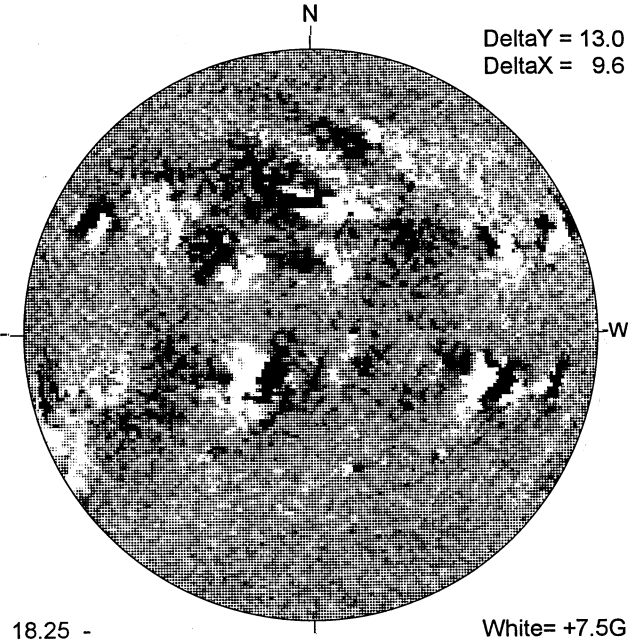

18.25 -
19.22 UT

White= +7.5G
Black = -7.5G

MEUDON H-ALPHA

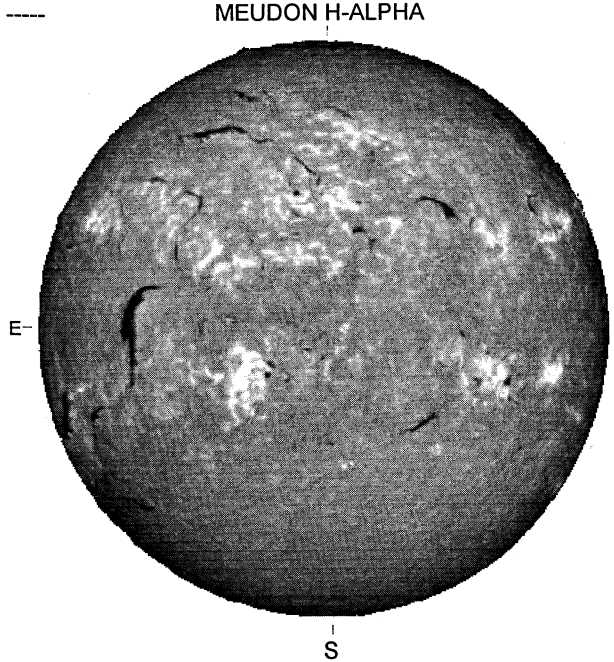

RAMEY SUNSPOT

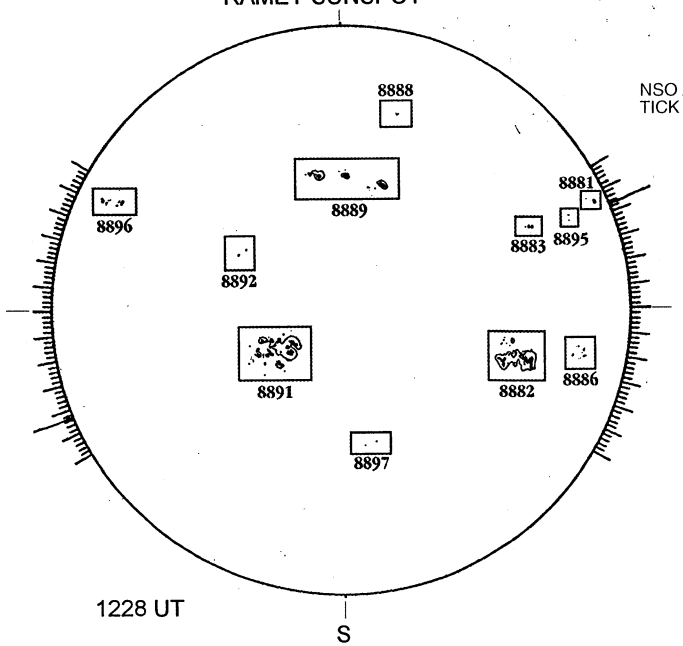

1228 UT

SACRAMENTO PEAK CORONA (1.15 Radii)----

NSO / SACRAMENTO PEAK CORONAL DATA
TICK MARKS EVERY 20 MILLIONTHS

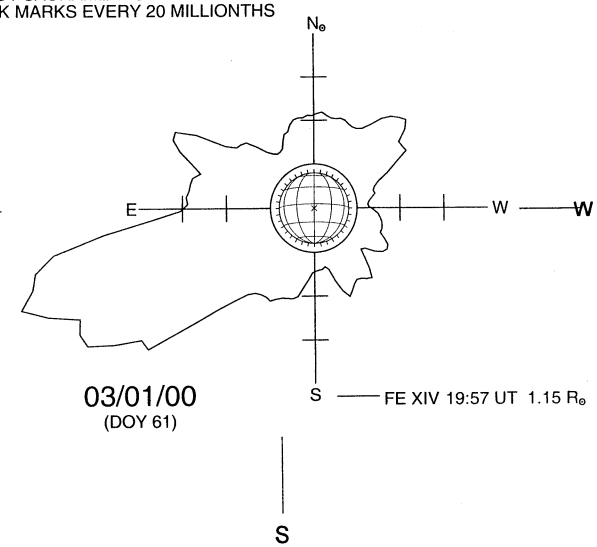

03/01/00
(DOY 61)