FEBRUARY 16, 2000 (P= -17.51, Bo = -6.85, Lo = 122.31)

KITT PEAK MAGNETOGRAM

Bright = +
Dark = -

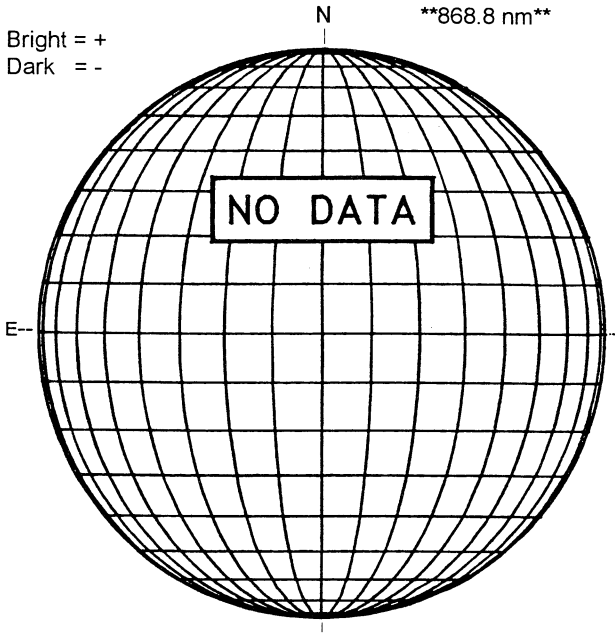

STANFORD MAGNETOGRAM

Solid = +
Dashed = -

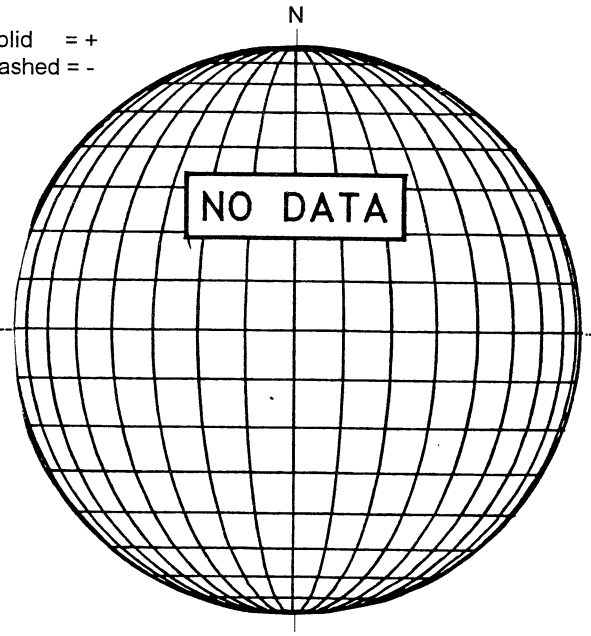

MT. WILSON MAGNETOGRAM

DeltaY =
DeltaX =

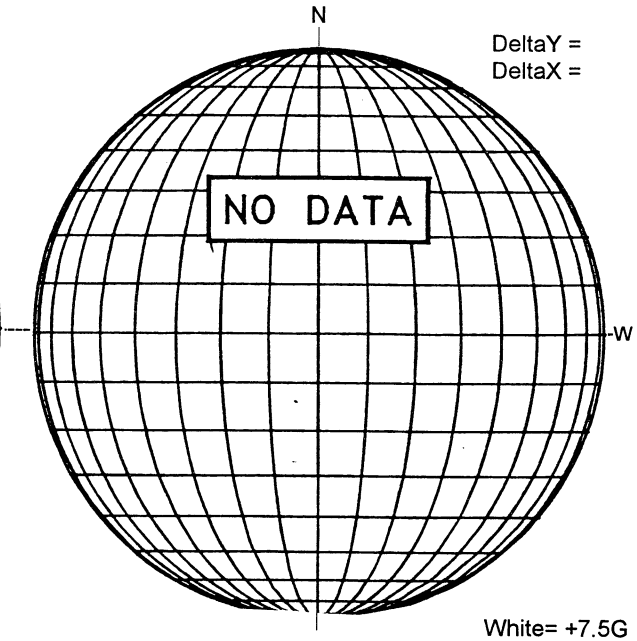

White= +7.5G
Black = -7.5G

----- MEUDON H-ALPHA

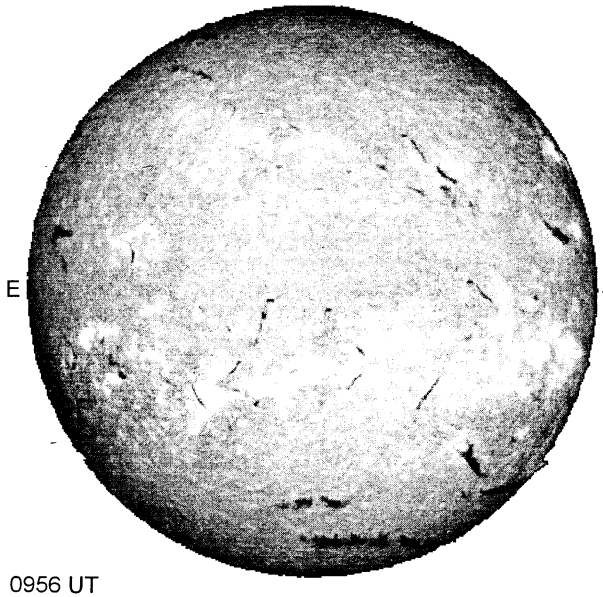

0956 UT

S

RAMEY SUNSPOT

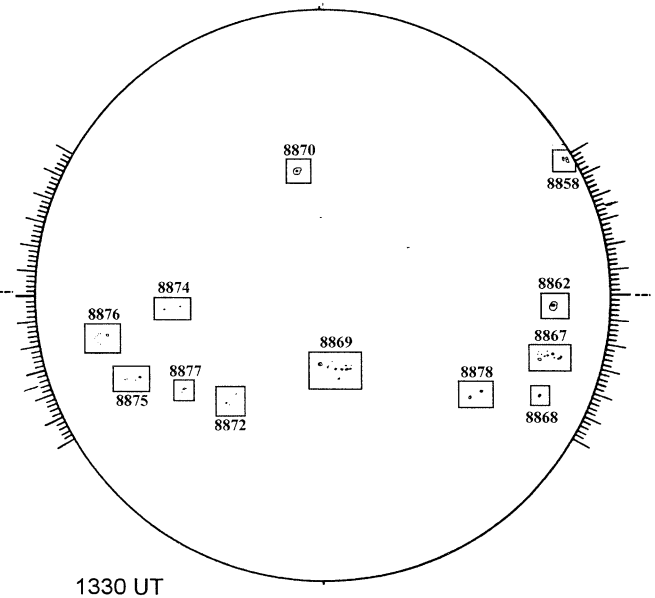

1330 UT

S

SACRAMENTO PEAK CORONA (1.15 Radii)----

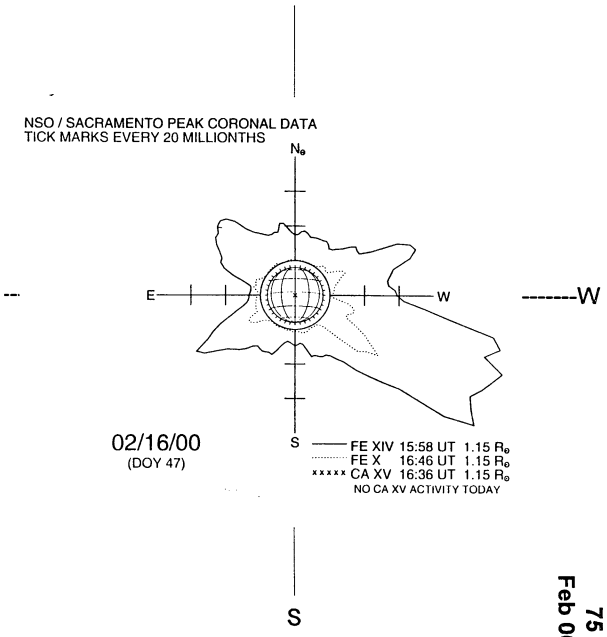

S