FEBRUARY 11, 2000 (P= -15.77, Bo = -6.61, Lo = 188.15)

KITT PEAK MAGNETOGRAM

868.8 nm

Bright = +
Dark = -

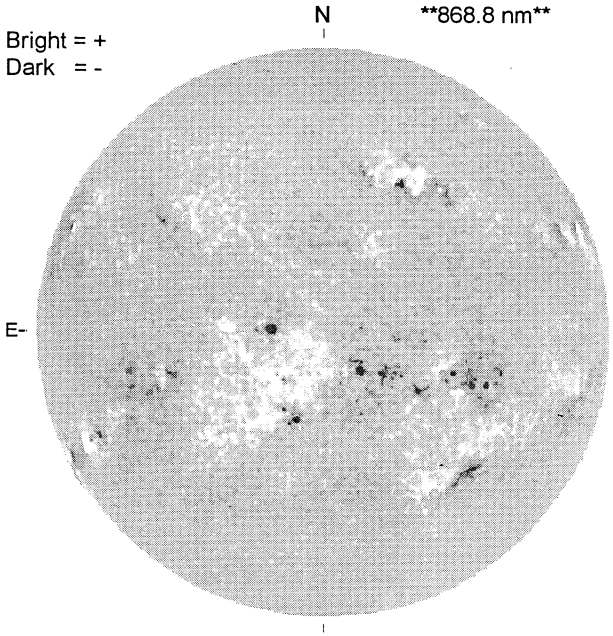

1807 UT

STANFORD MAGNETOGRAM

Solid = +
Dashed = -

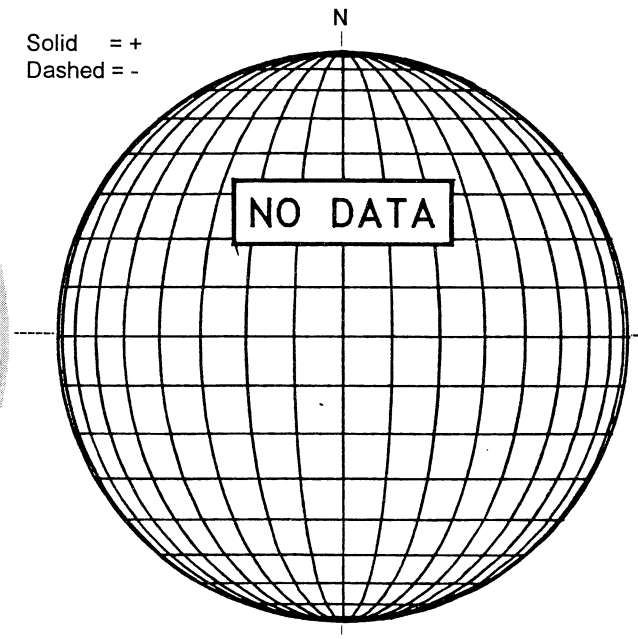

MT. WILSON MAGNETOGRAM

DeltaY =
DeltaX =

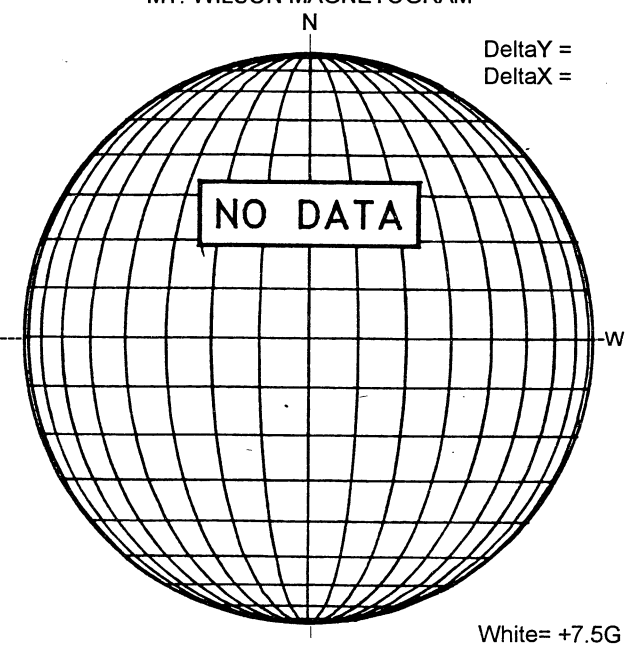

White= +7.5G
Black = -7.5G

MEUDON H-ALPHA

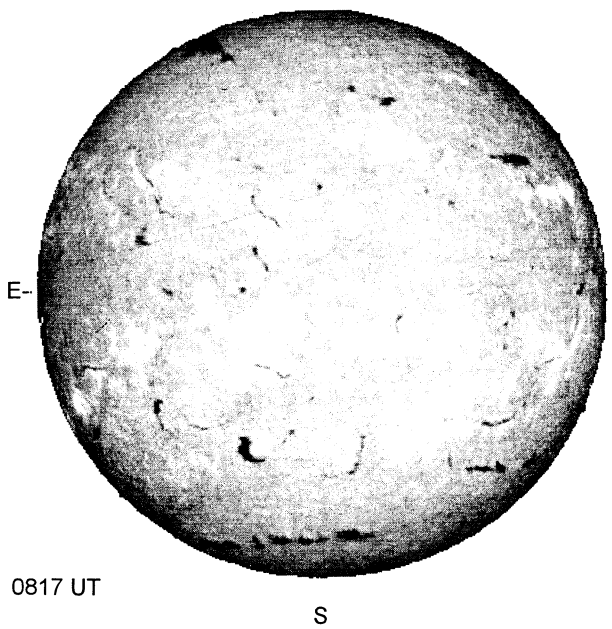

0817 UT

HOLLOMAN SUNSPOT

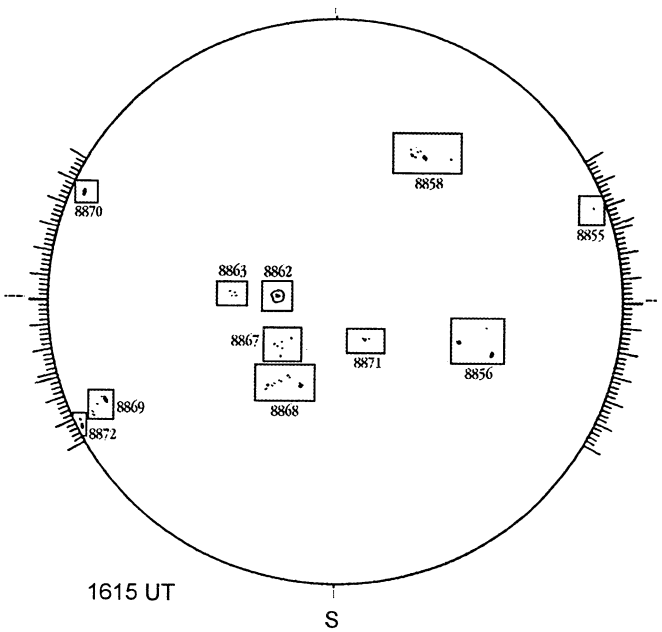

1615 UT

SACRAMENTO PEAK CORONA (1.15 Radii)

NSO / SACRAMENTO PEAK CORONAL DATA
TICK MARKS EVERY 20 MILLIONTHS

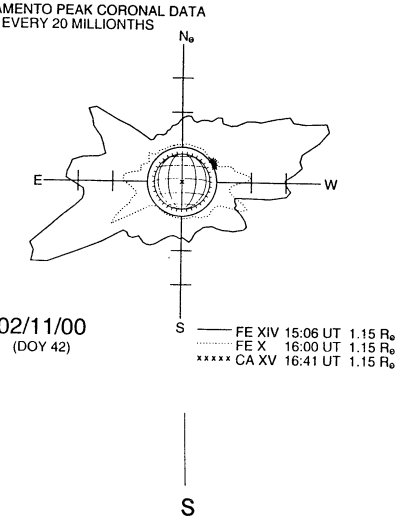

02/11/00
(DOY 42)

W

S