JANUARY 23, 2000 (P= -8.03, Bo = -5.25, Lo = 78.31)

KITT PEAK MAGNETOGRAM

868.8 nm

Bright = +
Dark = -

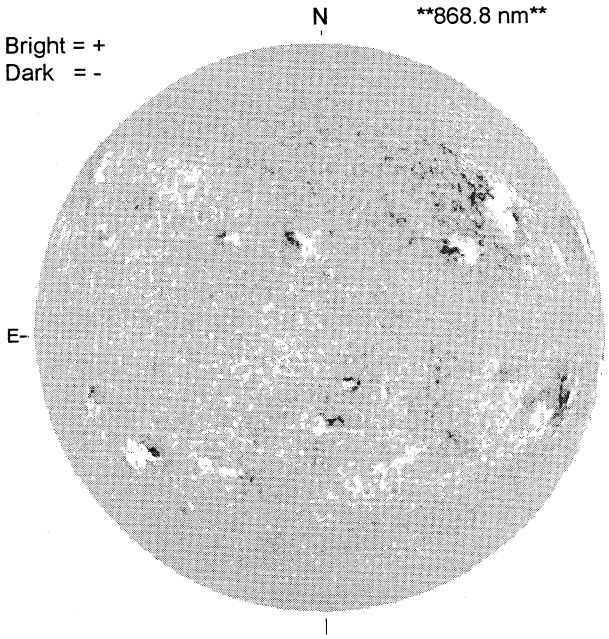

1630 UT

STANFORD MAGNETOGRAM

Solid = +
Dashed = -

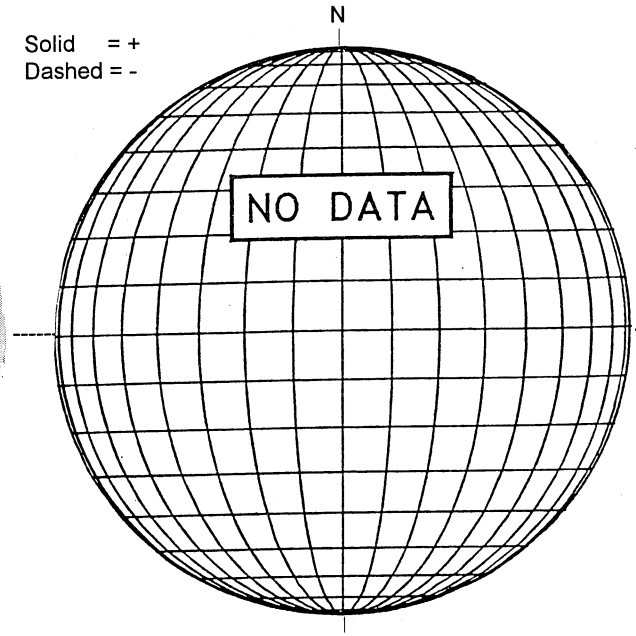

MT. WILSON MAGNETOGRAM

DeltaY =
DeltaX =

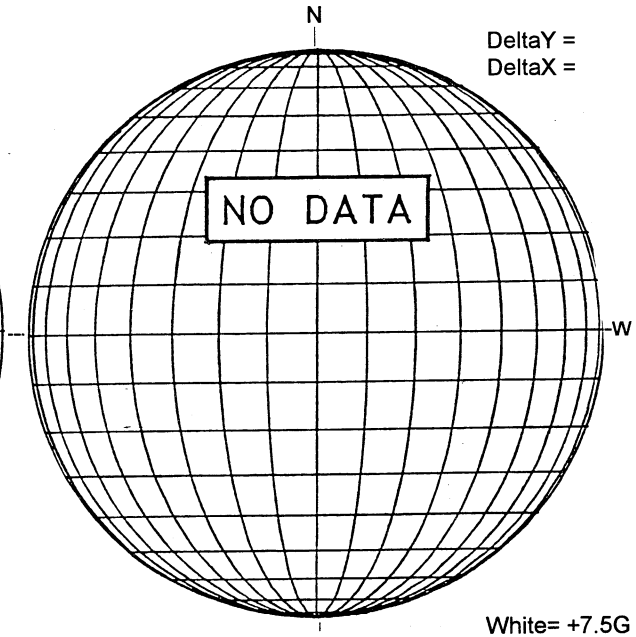

White= +7.5G
Black = -7.5G

MEUDON H-ALPHA

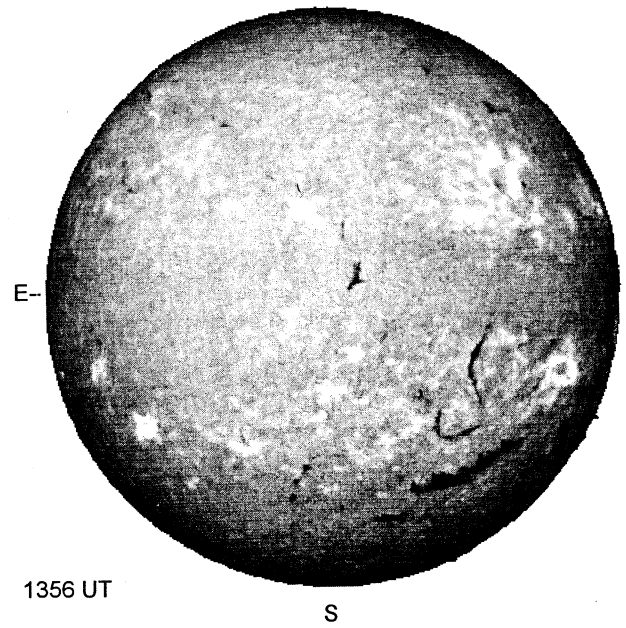

1356 UT

RAMEY SUNSPOT

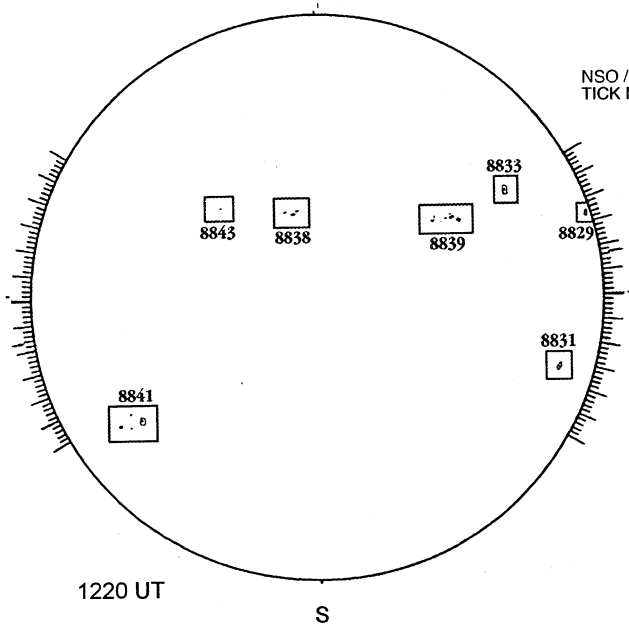

1220 UT

SACRAMENTO PEAK CORONA (1.15 Radii)

NSO / SACRAMENTO PEAK CORONAL DATA
TICK MARKS EVERY 20 MILLIONTHS

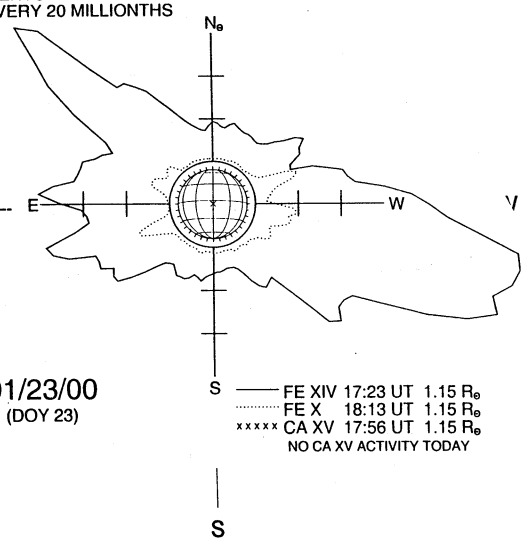

01/23/00
(DOY 23)

FE XIV 17:23 UT 1.15 Re
FE X 18:13 UT 1.15 Re
CA XV 17:56 UT 1.15 Re
NO CA XV ACTIVITY TODAY