JANUARY 11, 2000 (P= -2.46, Bo = -4.08, Lo = 236.32)

KITT PEAK MAGNETOGRAM

868.8 nm

Bright = +
Dark = -

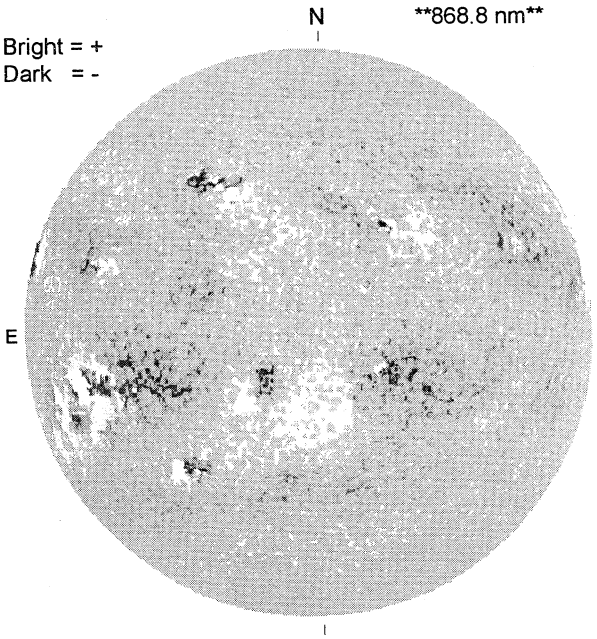

1623 UT

STANFORD MAGNETOGRAM

Solid = +
Dashed = -

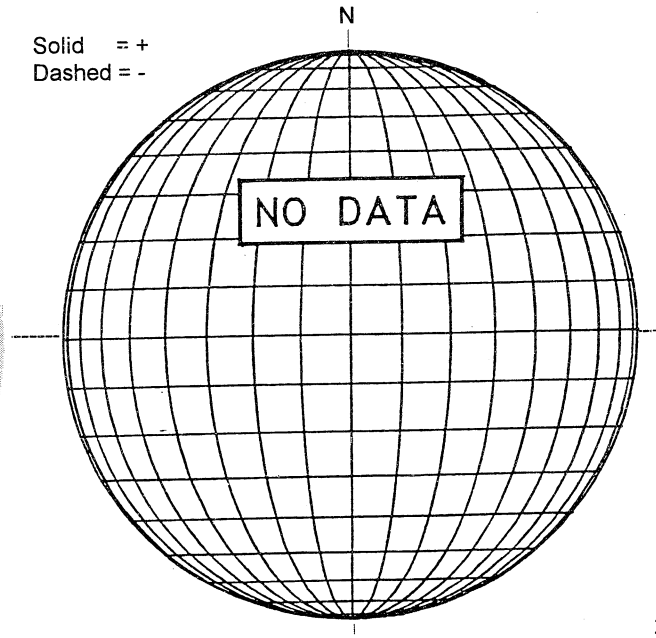

23.06 -
23.49 UT

MT. WILSON MAGNETOGRAM

DeltaY = 20.1
DeltaX = 12.9

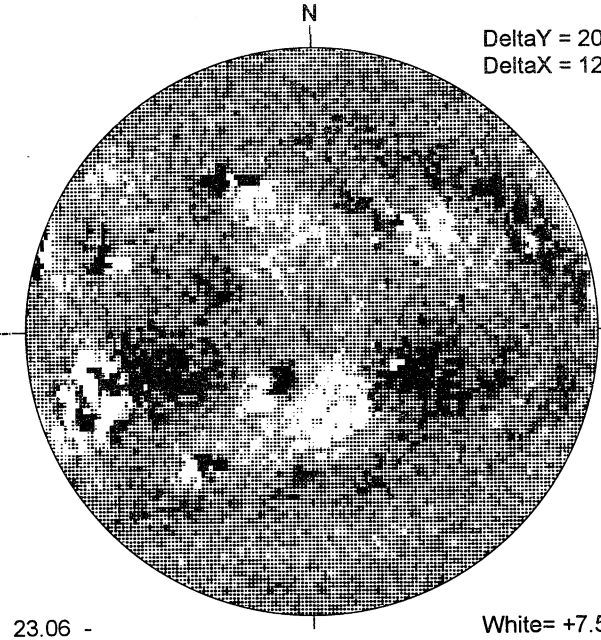

White= +7.5G
Black = -7.5G

MEUDON H-ALPHA

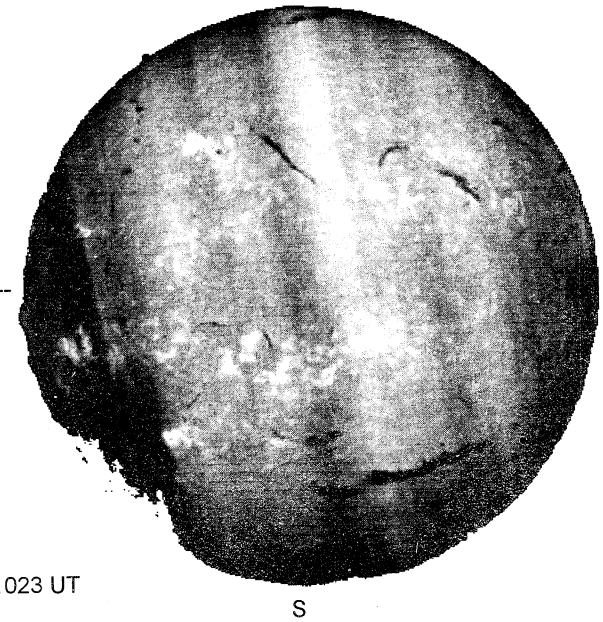

1023 UT

RAMEY SUNSPOT

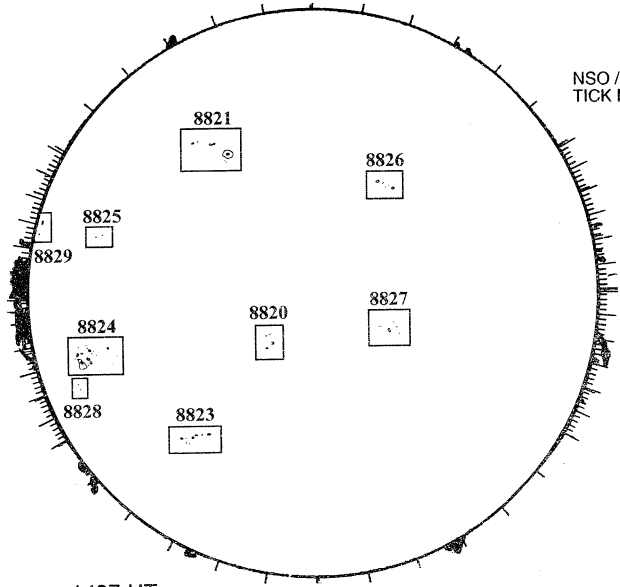

1437 UT
0856 UT LOMN Prom S

SACRAMENTO PEAK CORONA (1.15 Radii)----

NSO / SACRAMENTO PEAK CORONAL DATA
TICK MARKS EVERY 20 MILLIONTHS

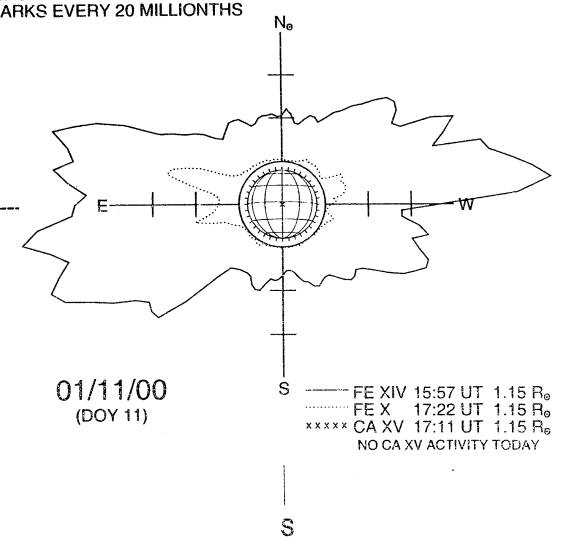

01/11/00
(DOY 11)

FE XIV 15:57 UT 1.15 $R_\odot$
FE X 17:22 UT 1.15 $R_\odot$
xxxxx CA XV 17:11 UT 1.15 $R_\odot$
NO CA XV ACTIVITY TODAY